Vehicle Information	
Year	2022
Make	Toyota
Model	Corolla Hatch

Enclosure Information	
Design Type	Bass-Reflex
Placement	Cargo area
Orientation	Position the enclosure with the subs directed rearward along the driver side, vent along the passenger side.

AUDIO DYNAMICS

Special Notes

Amplifier Information		
Continuous Power Handling	800	**W**
Subsonic Filter Setting	36	**Hz**
Low Pass Filter Setting	80	**Hz**

Subwoofer Information	
Make	Audio Dynamics
Model	AD 2206 D4
Quantity	2

Performance Information	
SQ	✓ Within the Vehicle
✓ **SQL**	Outside the Vehicle
SPL	Metering Position

Metering Information		
Headrest		
Dash / Windshield	**Peak Frequency**	**Hz**
Foot Well		

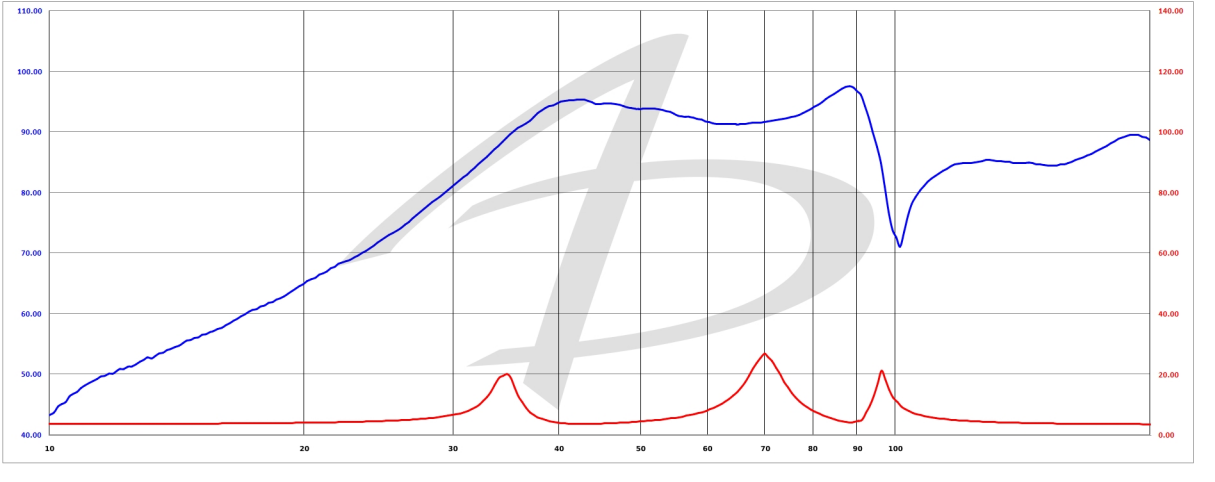

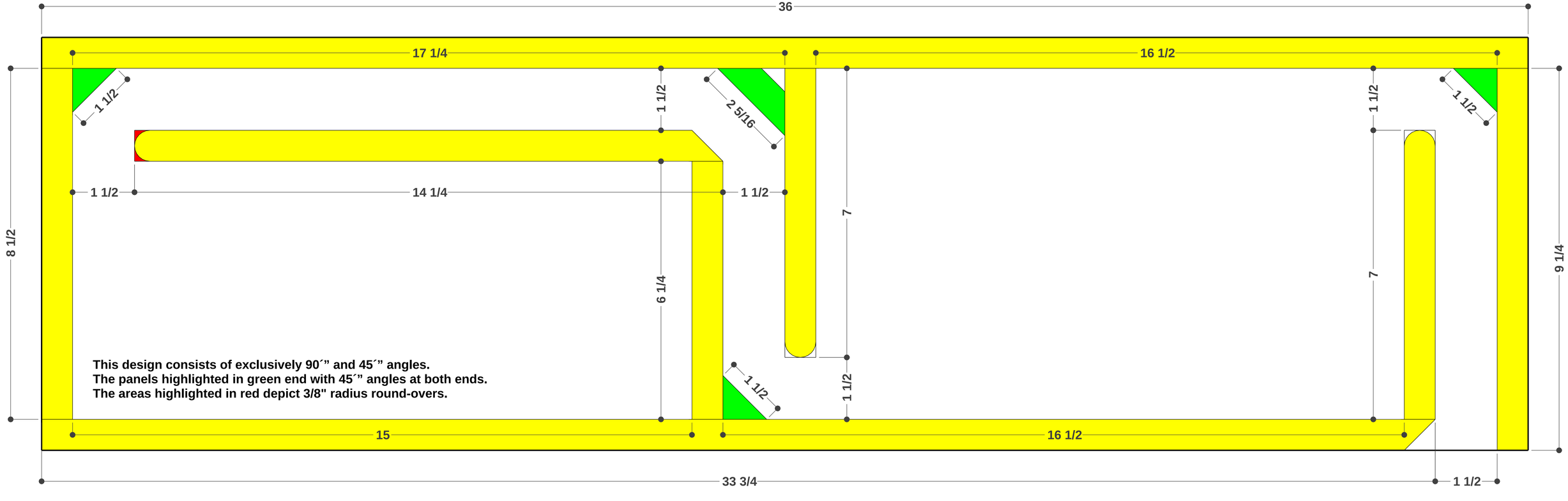
36
17 1/4
16 1/2
1 1/2
1 1/2
2 5/16
1 1/2
1 1/2
1 1/2
14 1/4
1 1/2
7
8 1/2
6 1/4
7
9 1/4
This design consists of exclusively 90´” and 45´” angles.
The panels highlighted in green end with 45´” angles at both ends.
The areas highlighted in red depict 3/8" radius round-overs.
1 1/2
1 1/2
15
16 1/2
33 3/4
1 1/2

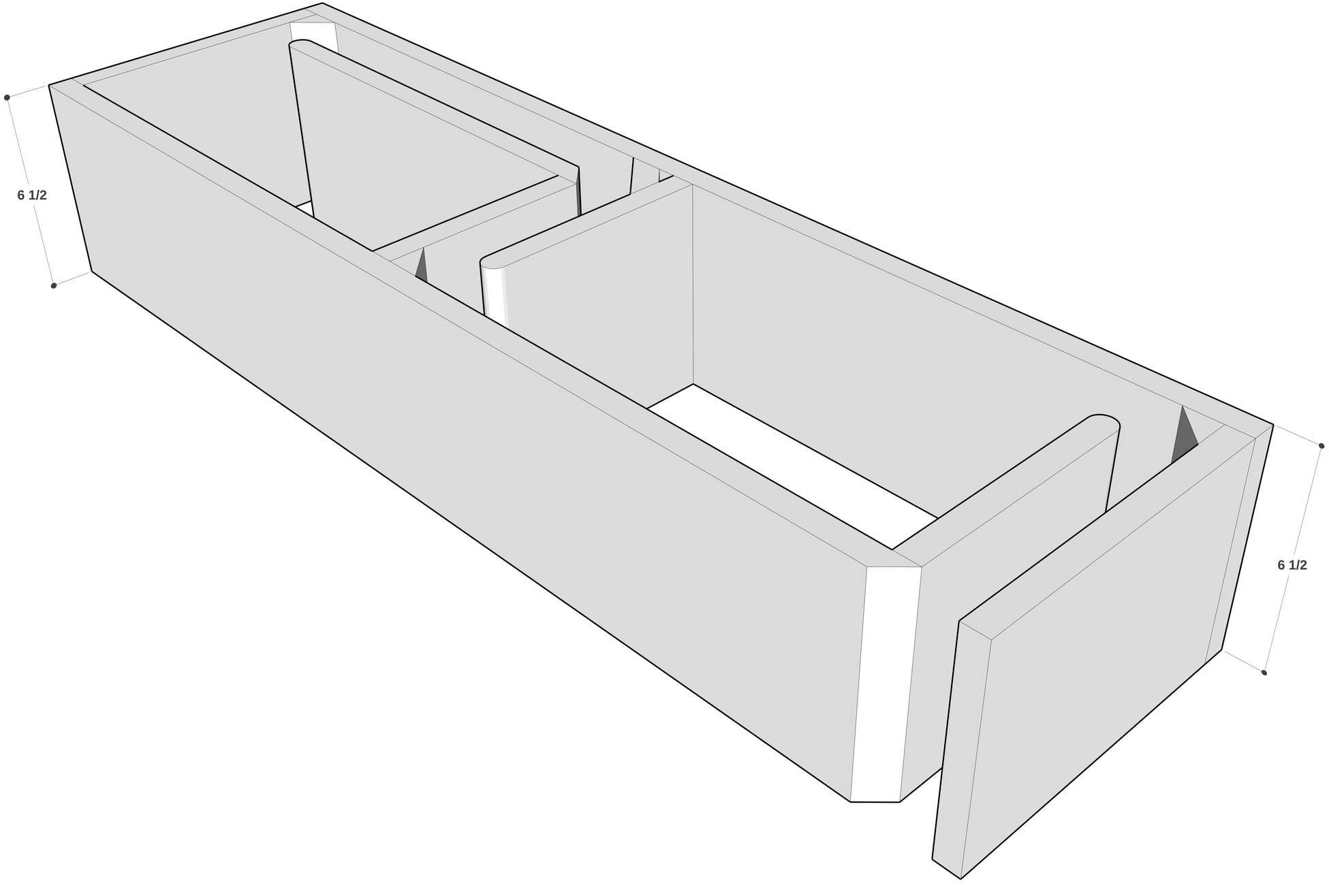
6 1/2
6 1/2

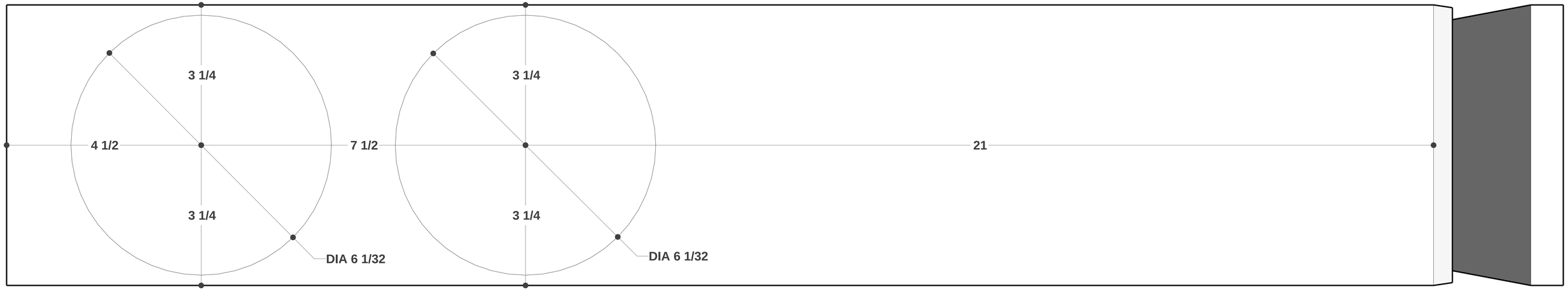
3 1/4
4 1/2
7 1/2
21
3 1/4
3 1/4
DIA 6 1/32
3 1/4
3 1/4
DIA 6 1/32

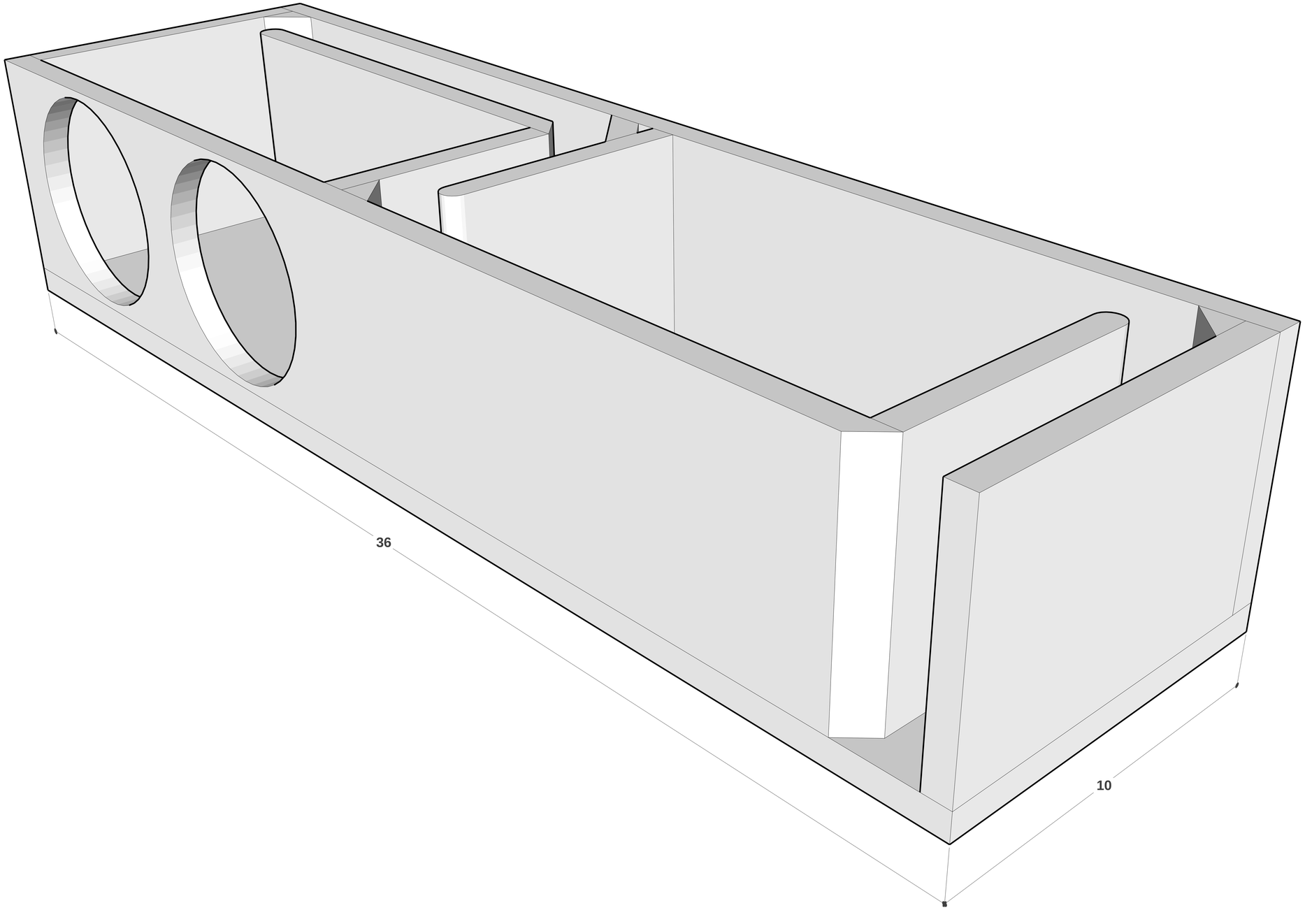
36
10

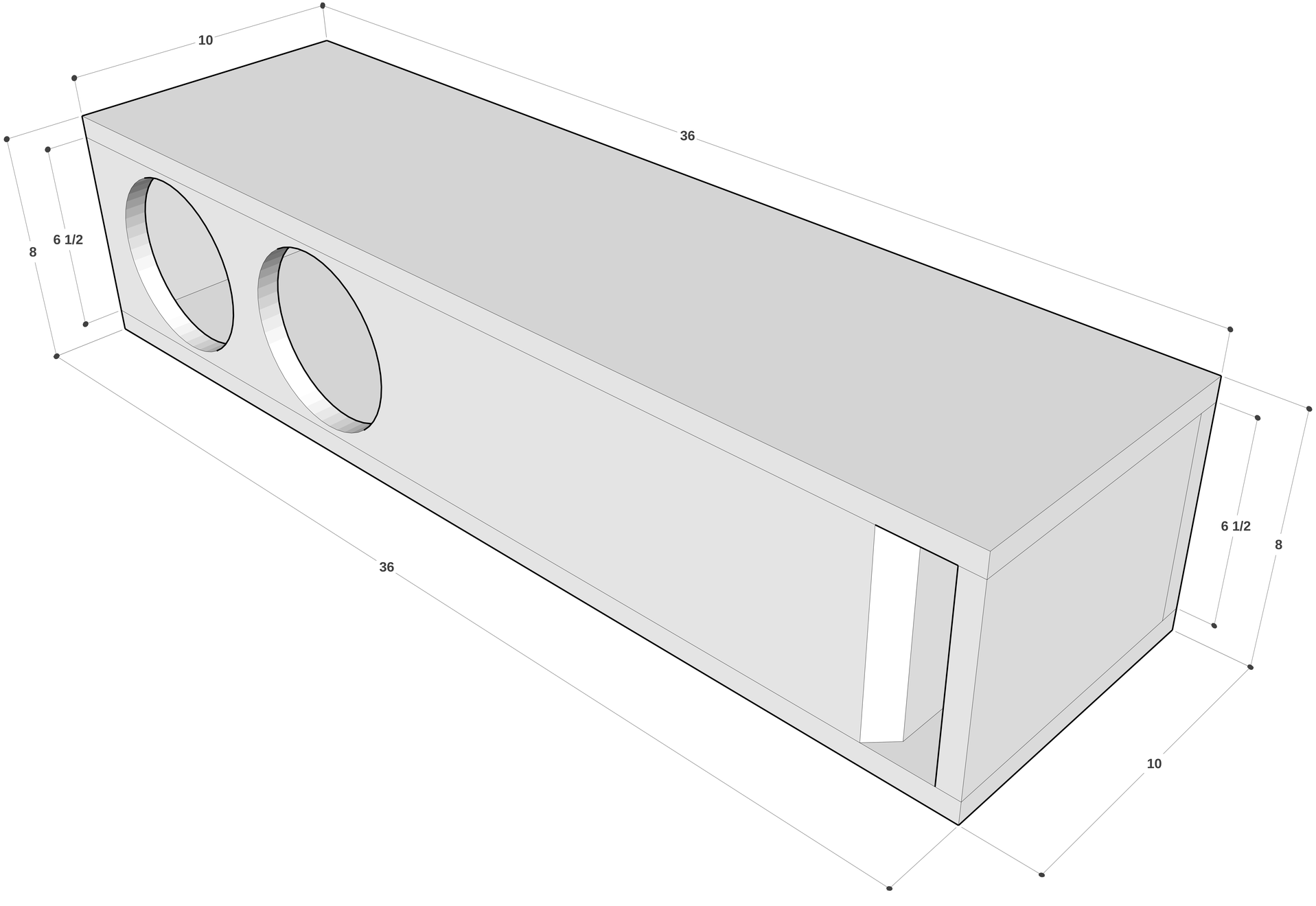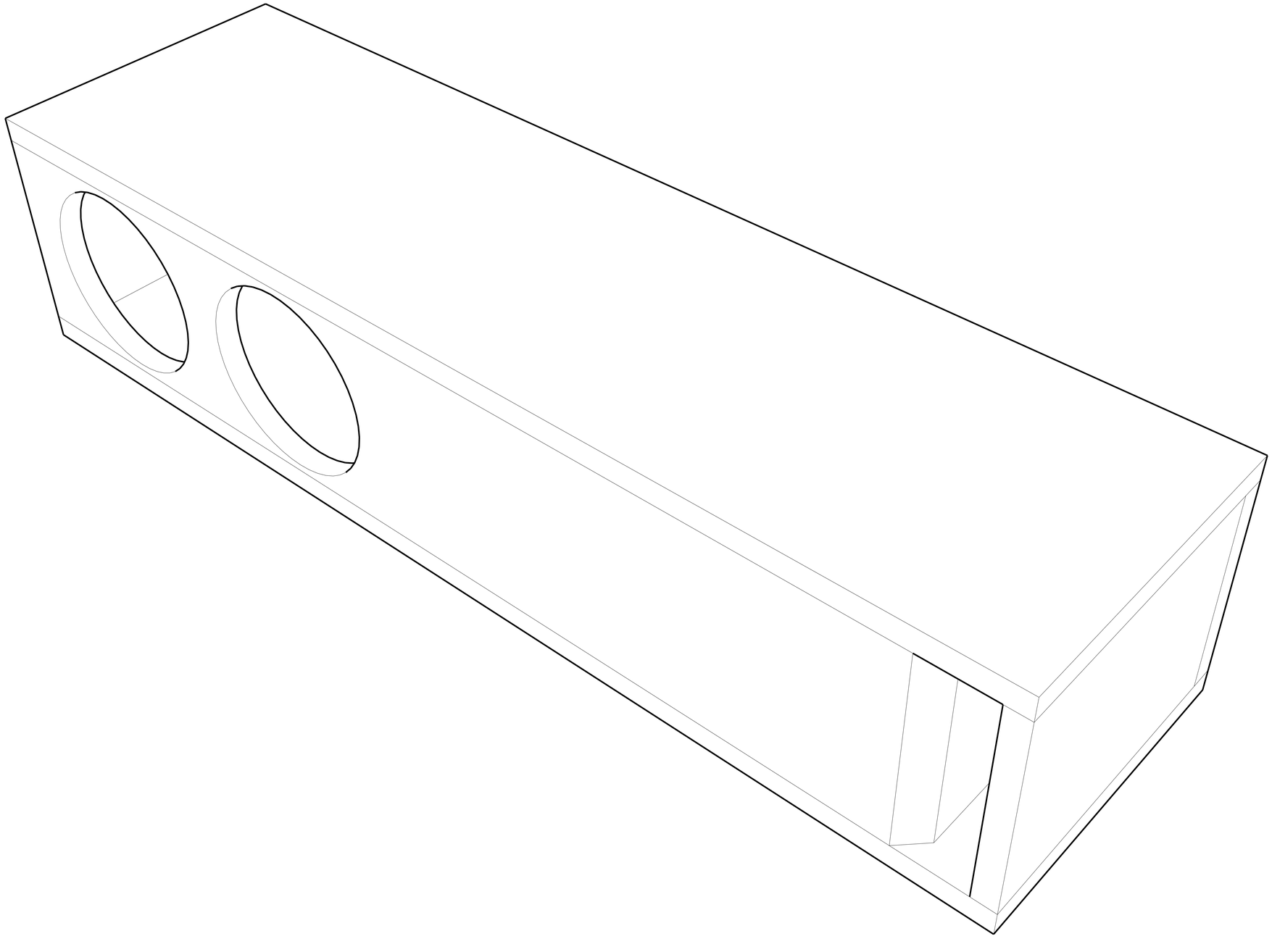
10
36
8
6 1/2
36
6 1/2
8
10