Vehicle Information	
Year	1971
Make	Chevy
Model	Caprice

Enclosure Information	
Design Type	Bass-Reflex
Placement	Trunk
Orientation	Position the enclosure with the subs directed upward, vents directed rearward.

AUDIO DYNAMICS

Special Notes

Amplifier Information		
Continuous Power Handling	1,200	**W**
Subsonic Filter Setting	30	**Hz**
Low Pass Filter Setting	58	**Hz**

Subwoofer Information	
Make	Audio Dynamics
Model	AD 3015 D4
Quantity	2

Performance Information	
SQ	✓ Within the Vehicle
✓ **SQL**	Outside the Vehicle
SPL	Metering Position

Metering Information		
Headrest	**Peak Frequency**	**Hz**
Dash / Windshield		
Foot Well		

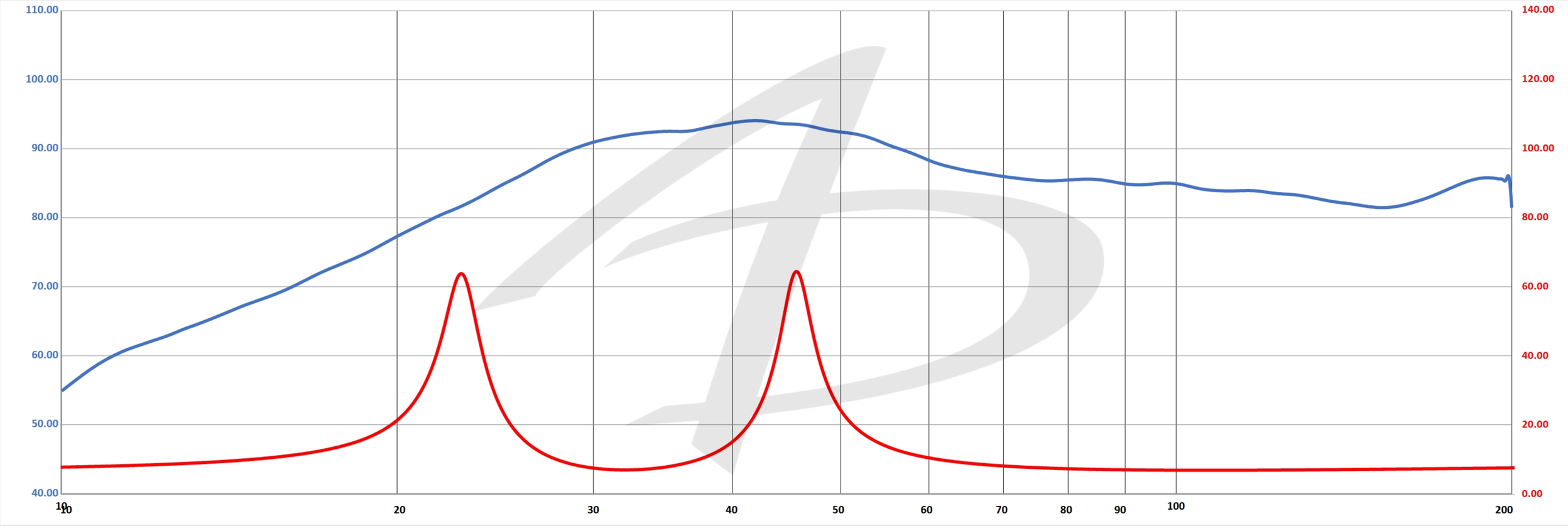

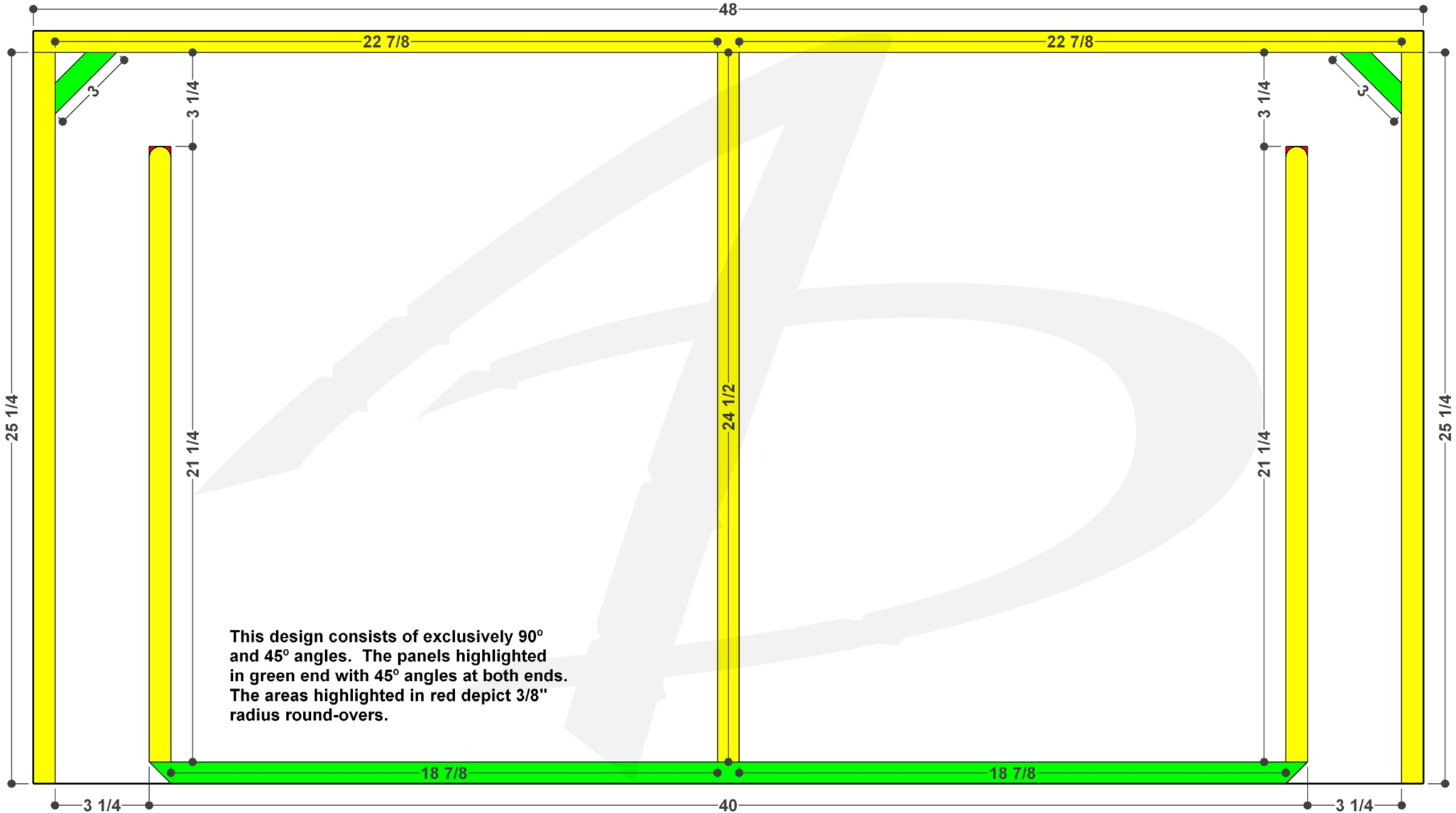
48
22 7/8
22 7/8
3
3
3 1/4
3 1/4
25 1/4
25 1/4
21 1/4
21 1/4
24 1/2
This design consists of exclusively 90º and 45º angles. The panels highlighted in green end with 45º angles at both ends. The areas highlighted in red depict 3/8" radius round-overs.
18 7/8
18 7/8
3 1/4
40
3 1/4

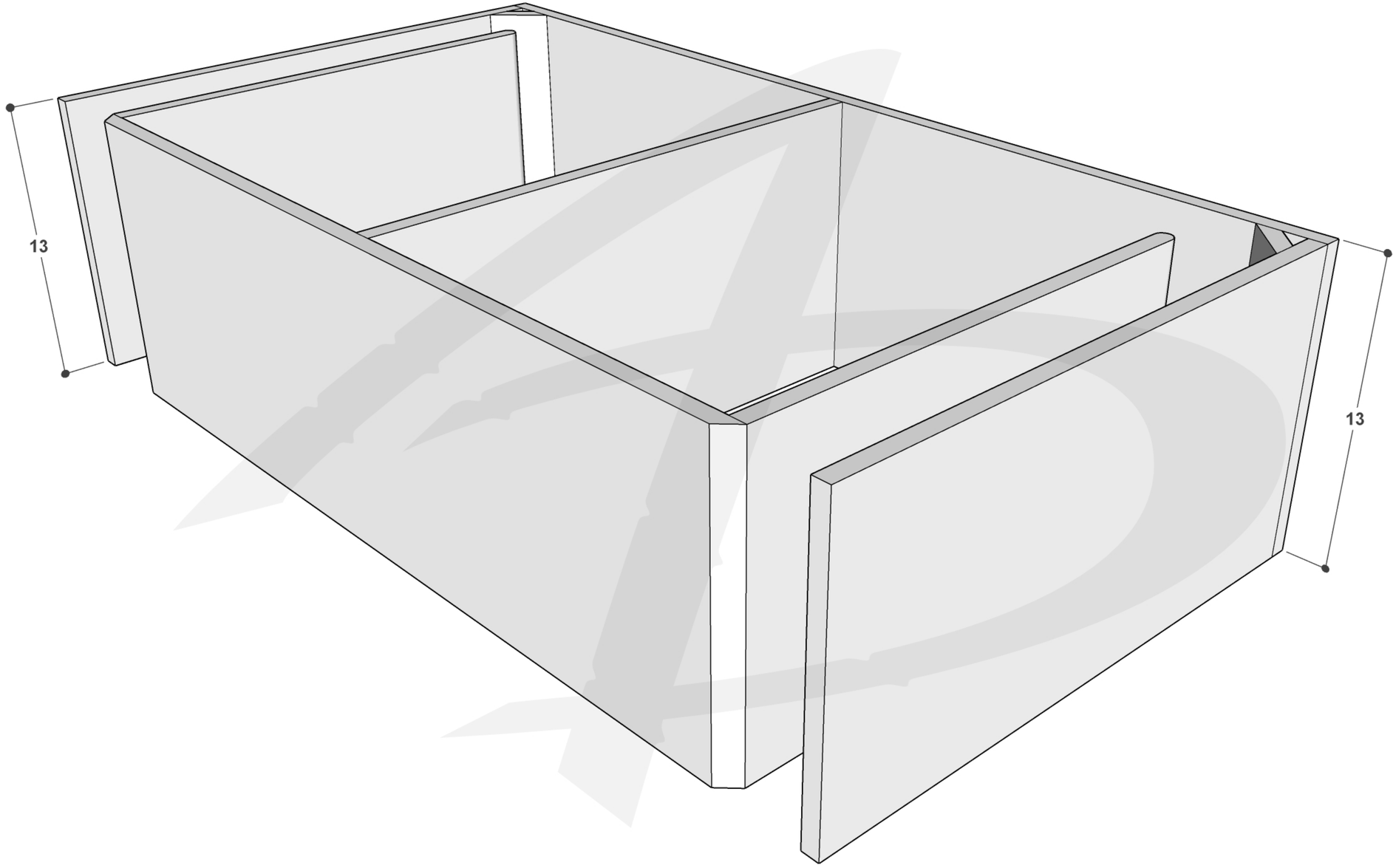
13
13

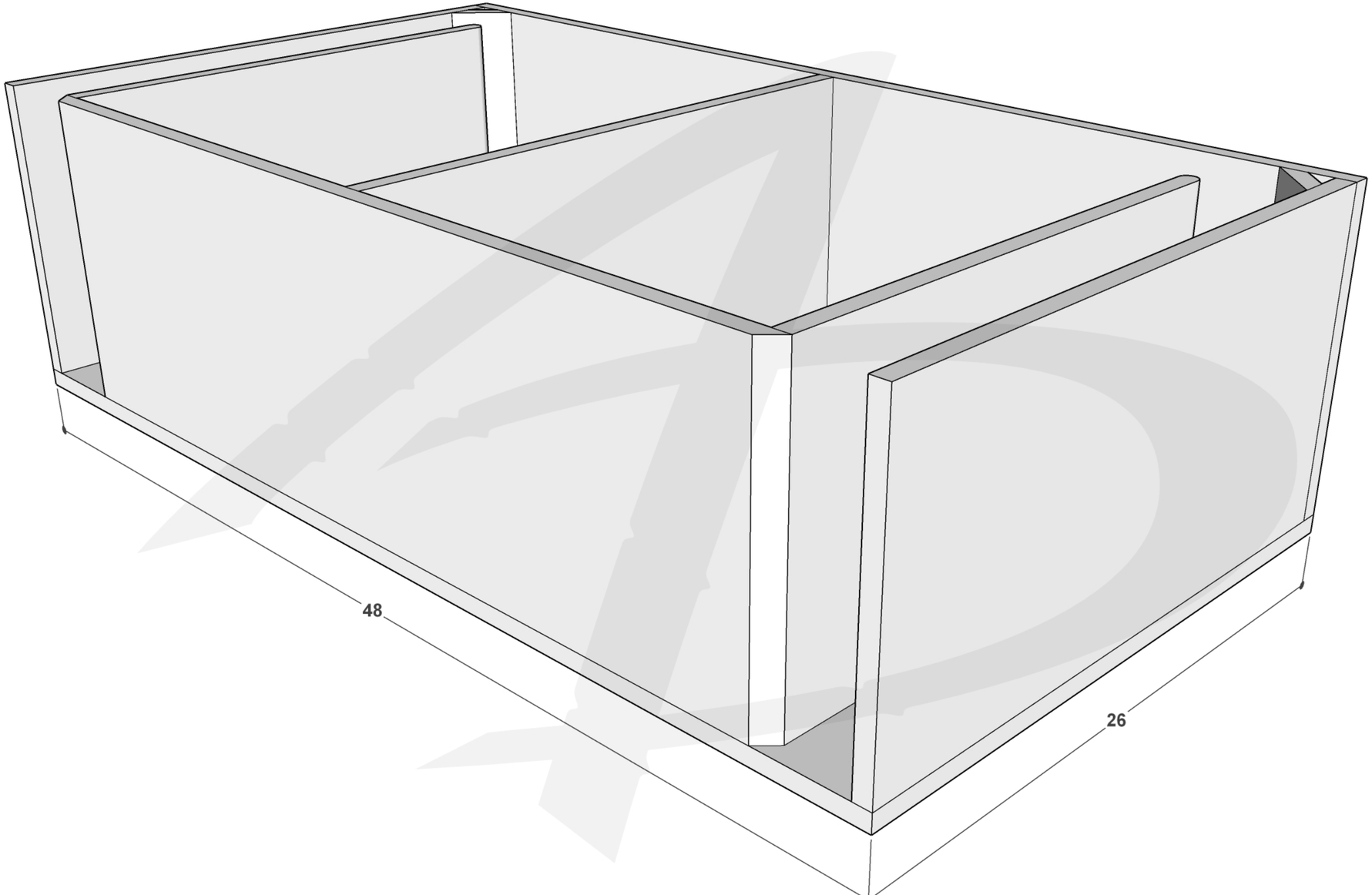
48
26

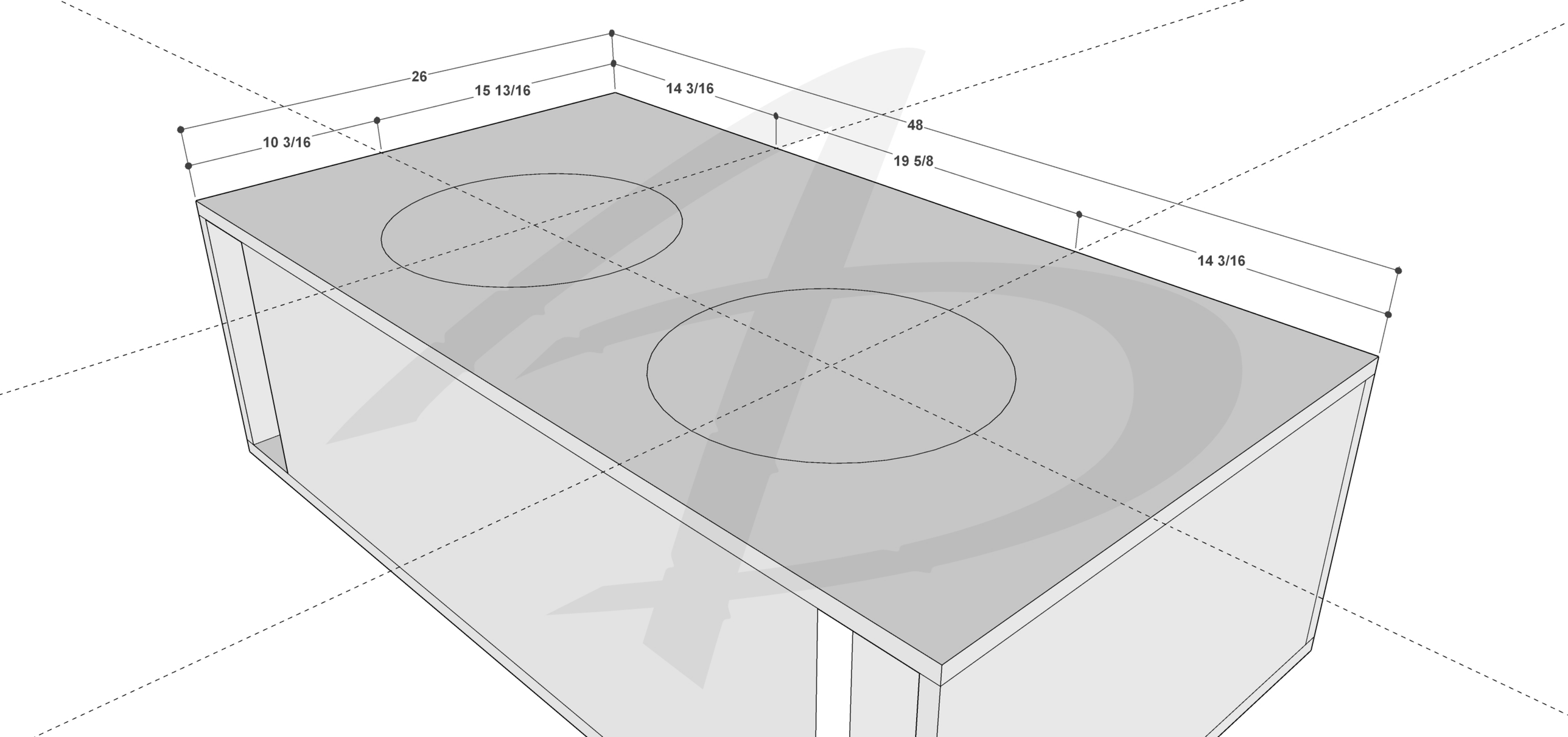
26
15 13/16
10 3/16
14 3/16
48
19 5/8
14 3/16

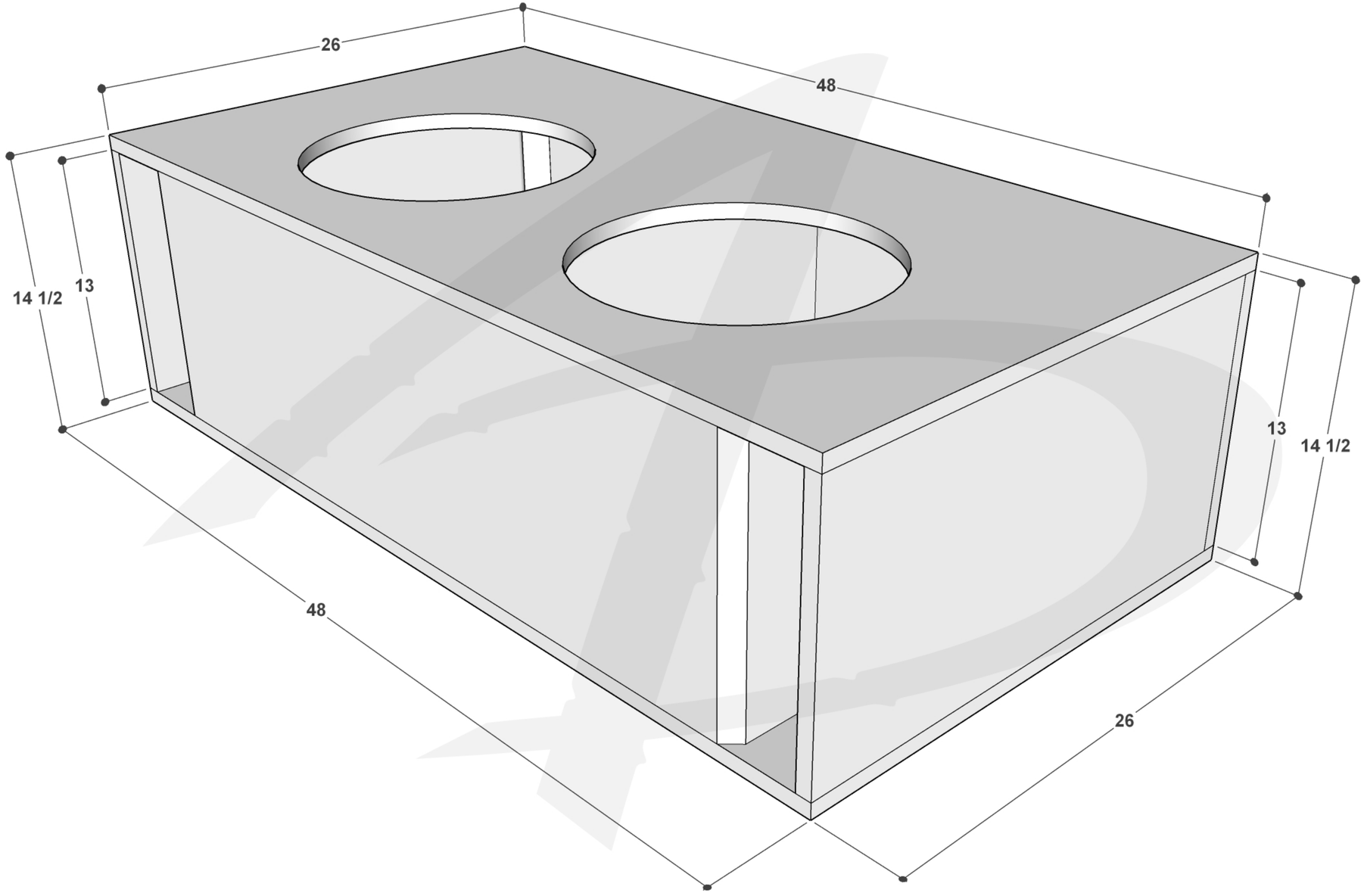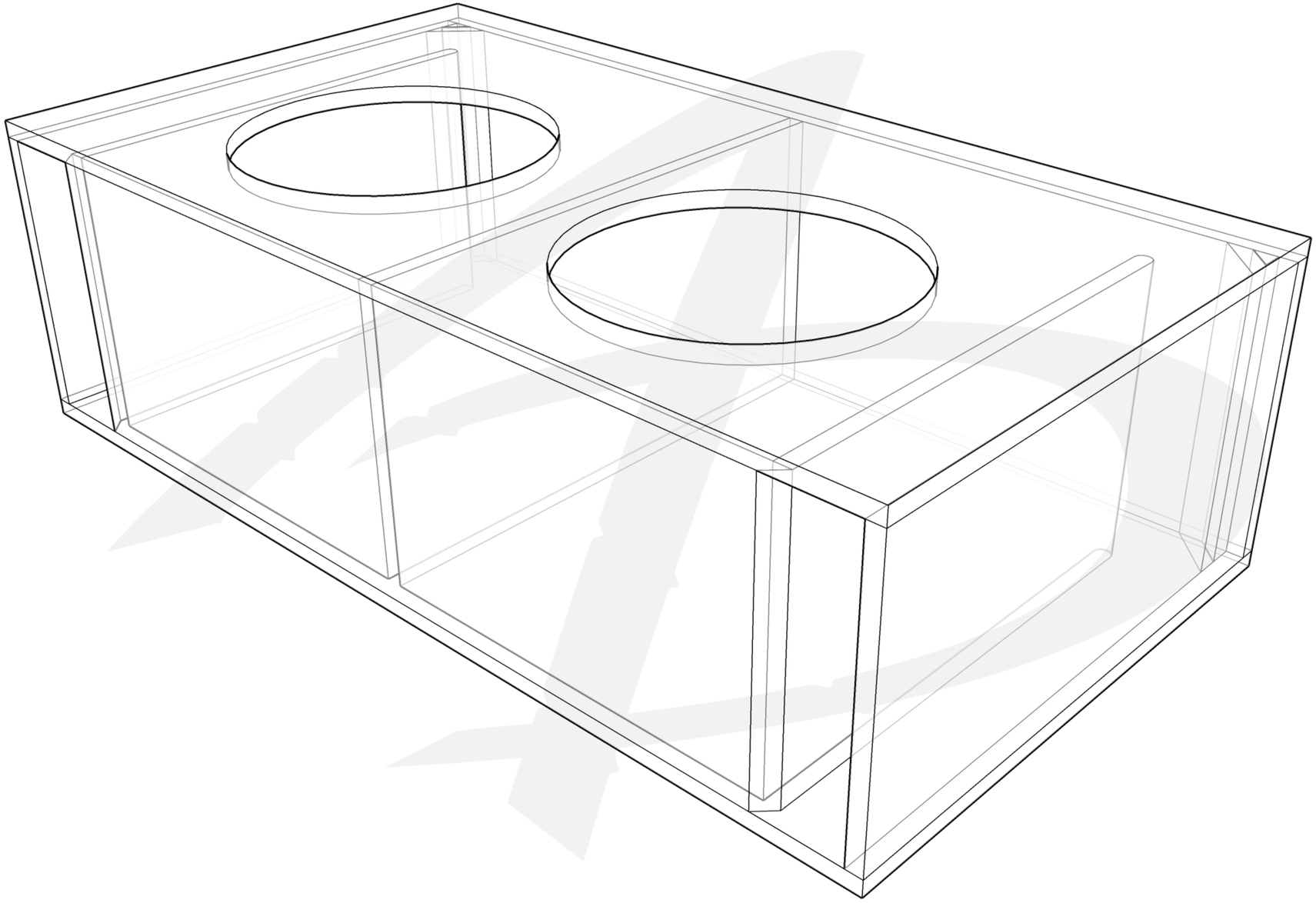
26
48
14 1/2
13
13
14 1/2
48
26