Vehicle Information	
Year	2016
Make	VW
Model	GTI

Enclosure Information	
Design Type	Bass-Reflex
Placement	Cargo area
Orientation	Position the enclosure with the subs directed upward, vent directed toward the passenger side.

AUDIO DYNAMICS

Special Notes

Amplifier Information		
Continuous Power Handling	3,000	**W**
Subsonic Filter Setting	24	**Hz**
Low Pass Filter Setting	60	**Hz**

Subwoofer Information	
Make	Audio Dynamics
Model	AD4215 D2
Quantity	2

Performance Information	
SQ	✓ Within the Vehicle
✓ **SQL**	Outside the Vehicle
SPL	Metering Position

Metering Information		
Headrest	**Peak Frequency**	**Hz**
Dash / Windshield		
Foot Well		

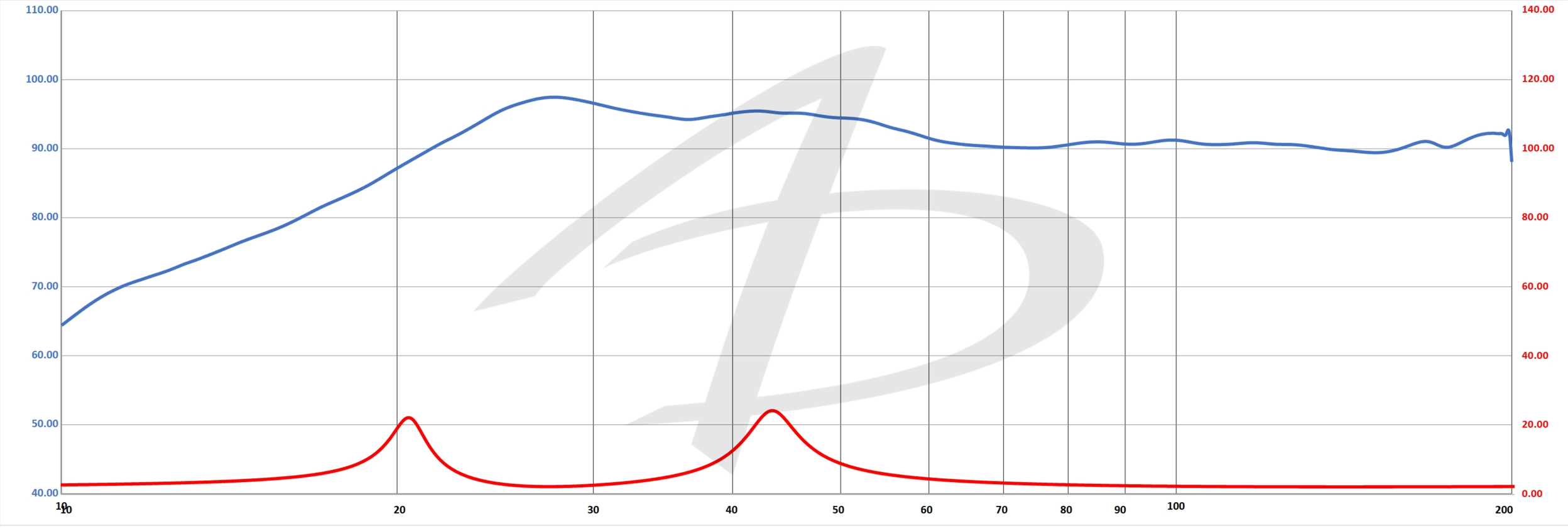

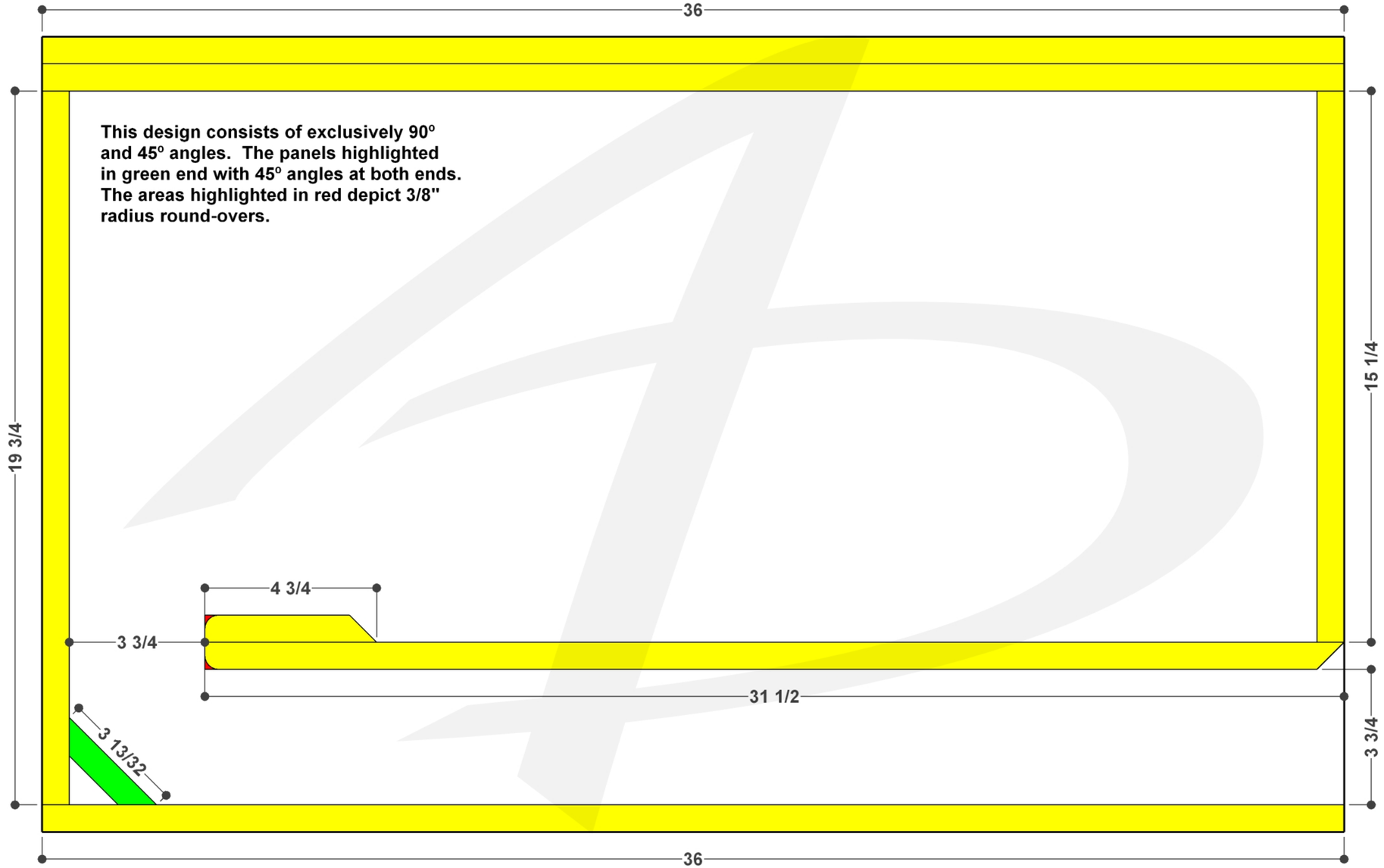
36
This design consists of exclusively 90º and 45º angles. The panels highlighted in green end with 45º angles at both ends. The areas highlighted in red depict 3/8" radius round-overs.
19 3/4
15 1/4
4 3/4
3 3/4
31 1/2
3 13/32
3 3/4
36

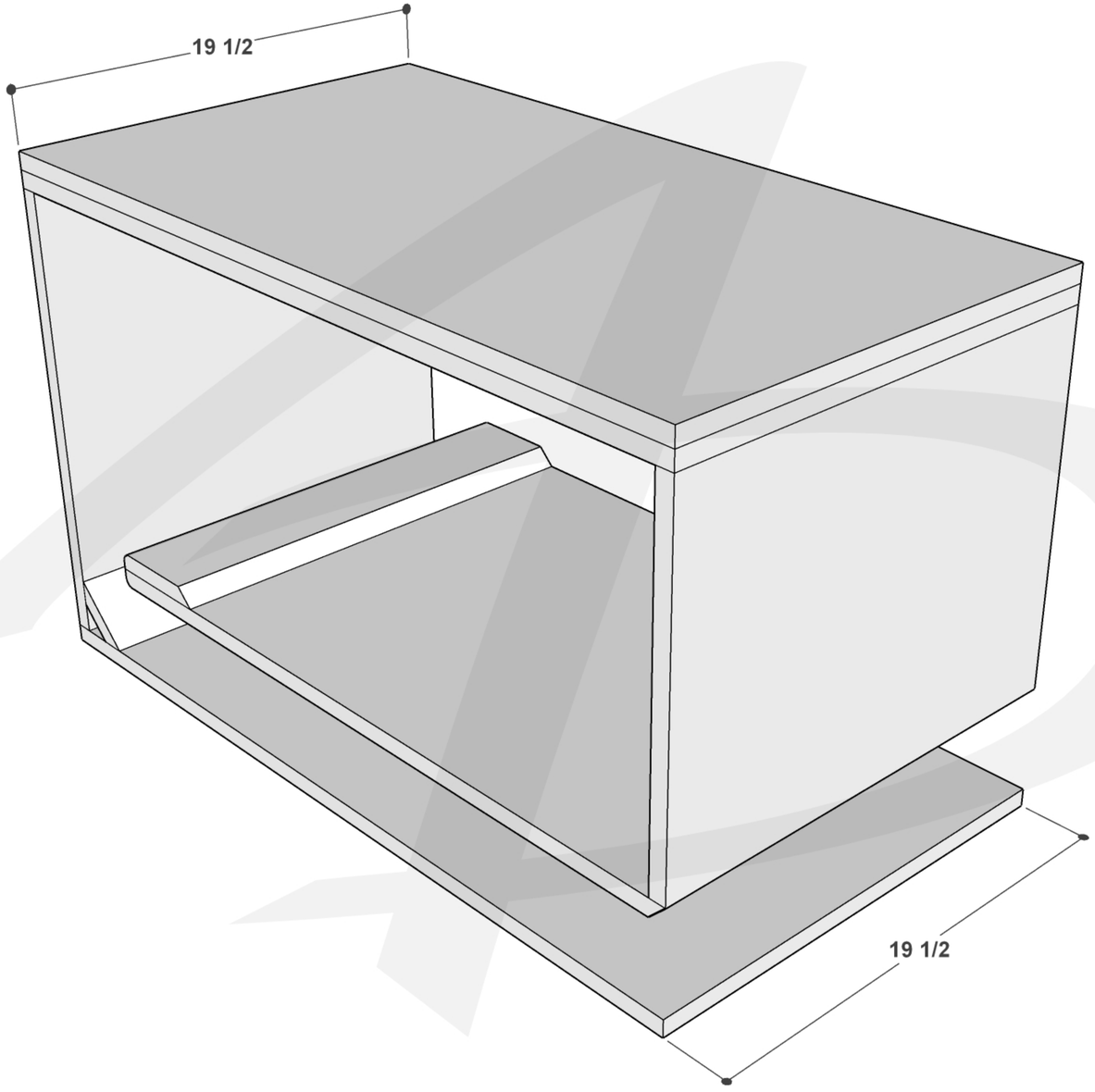
19 1/2
19 1/2

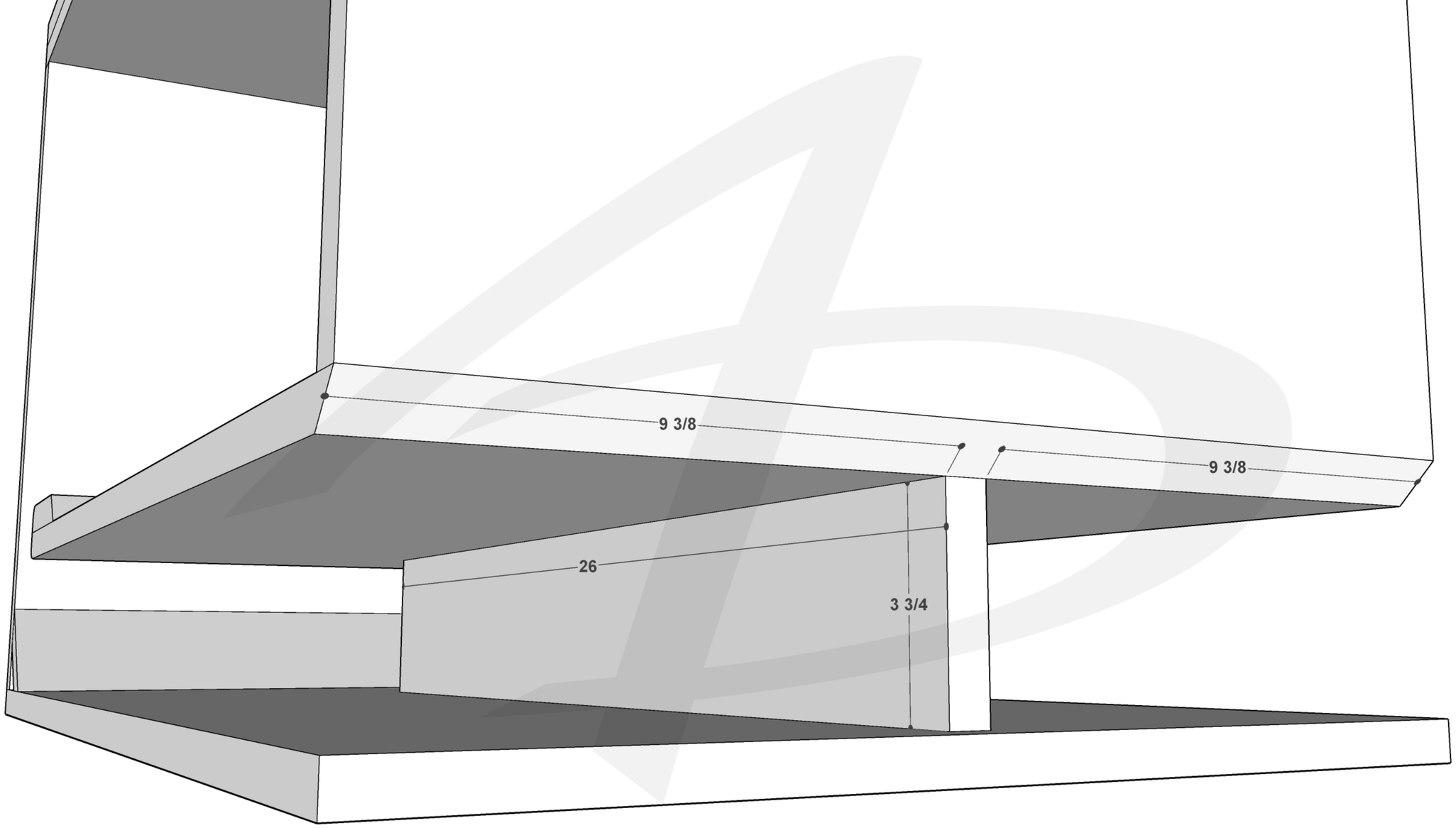
9 3/8
9 3/8
26
3 3/4

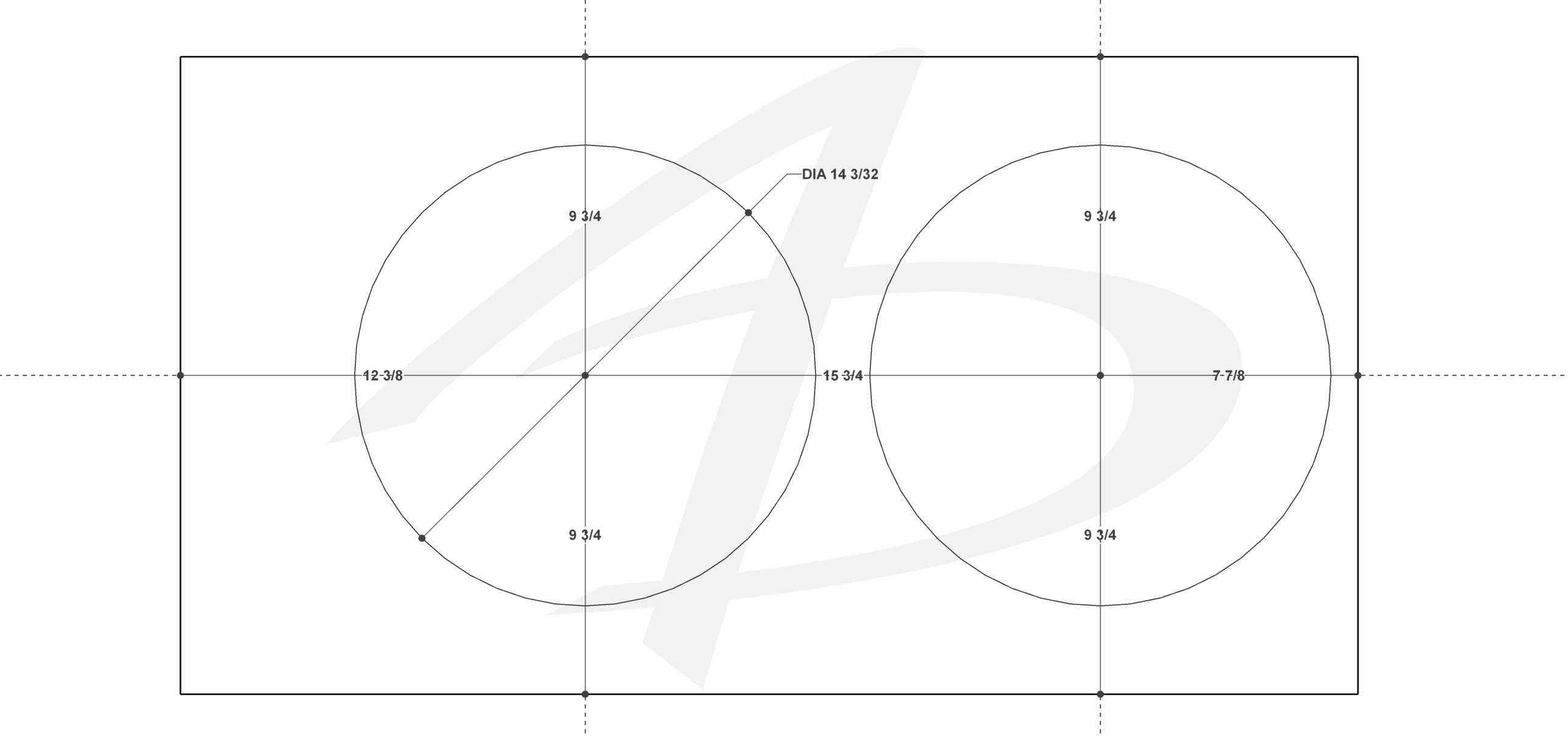
DIA 14 3/32
9 3/4
9 3/4
12 3/8
15 3/4
7 7/8
9 3/4
9 3/4

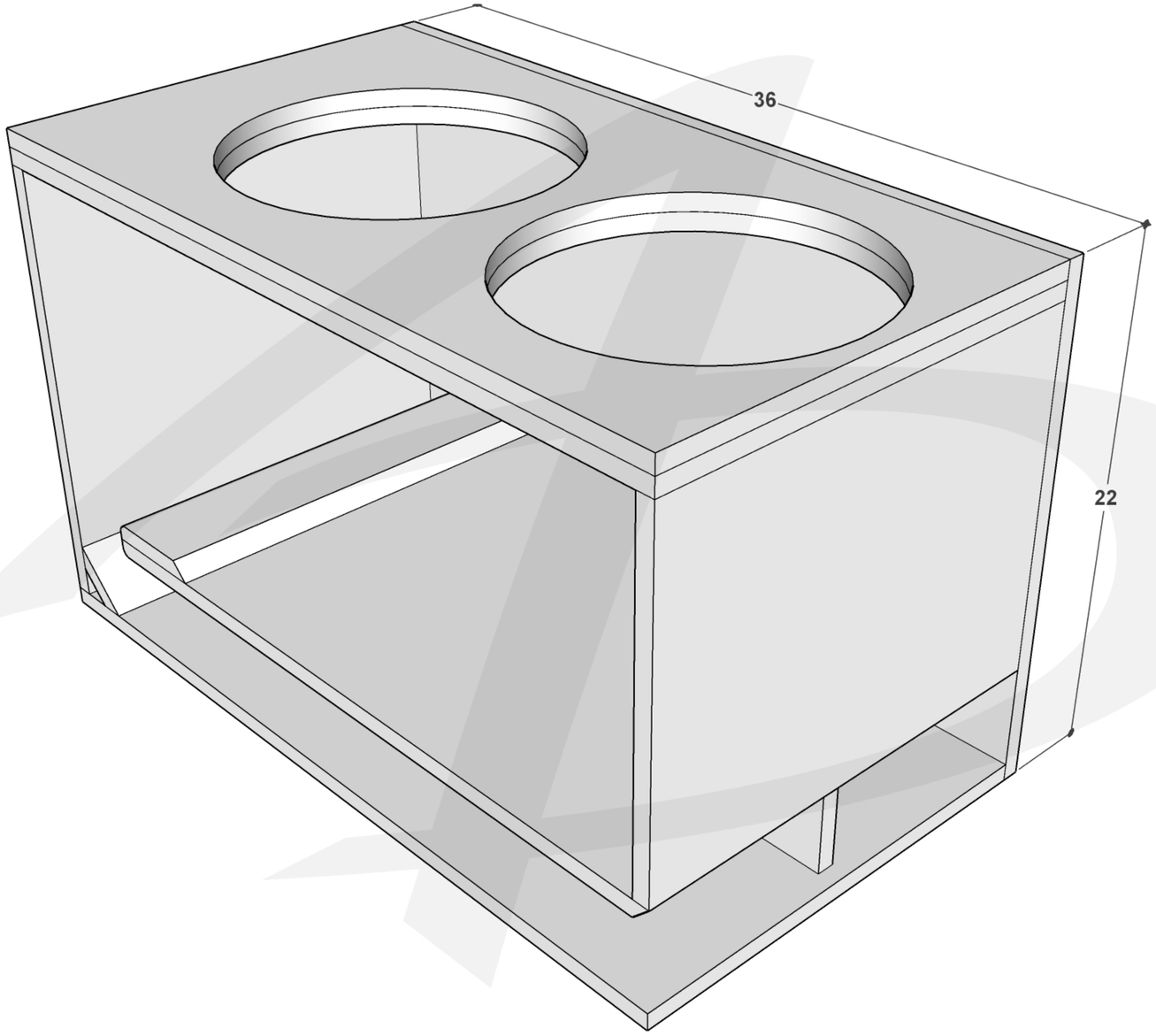
36
22

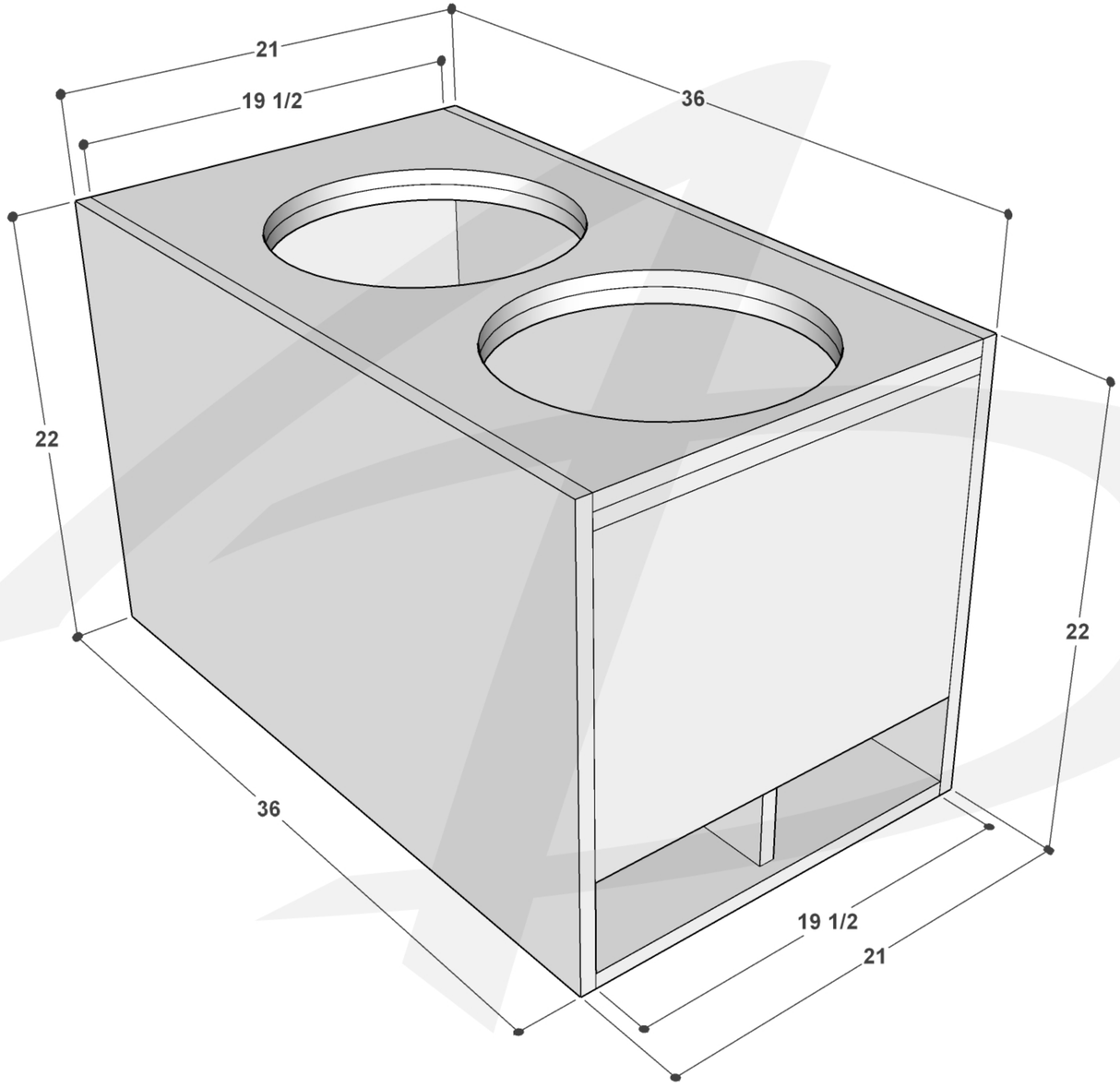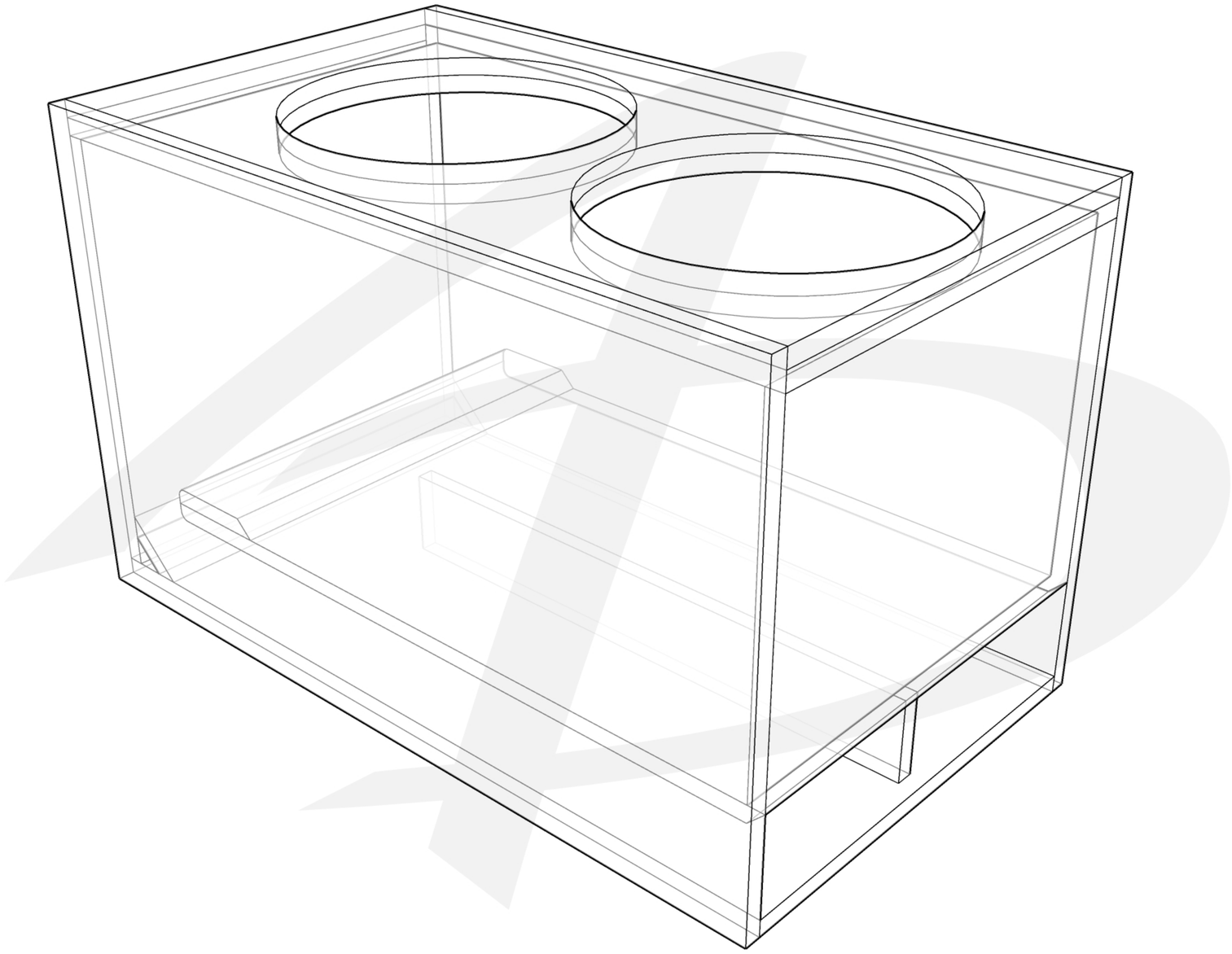
21
19 1/2
36
22
22
36
19 1/2
21