Vehicle Information	
Year	2008
Make	Audi
Model	A6

Enclosure Information	
Design Type	Bass-Reflex
Placement	Trunk
Orientation	Position the enclosure with the subs directed rearward, vent along the passenger side.

AUDIO DYNAMICS

Special Notes

Amplifier Information		
Continuous Power Handling	1,200	**W**
Subsonic Filter Setting	28	**Hz**
Low Pass Filter Setting	60	**Hz**

Subwoofer Information	
Make	Audio Dynamics
Model	AD3010 D4
Quantity	2

Performance Information	
SQ	✓ Within the Vehicle
✓ **SQL**	Outside the Vehicle
SPL	Metering Position

Metering Information		
Headrest	**Peak Frequency**	**Hz**
Dash / Windshield		
Foot Well		

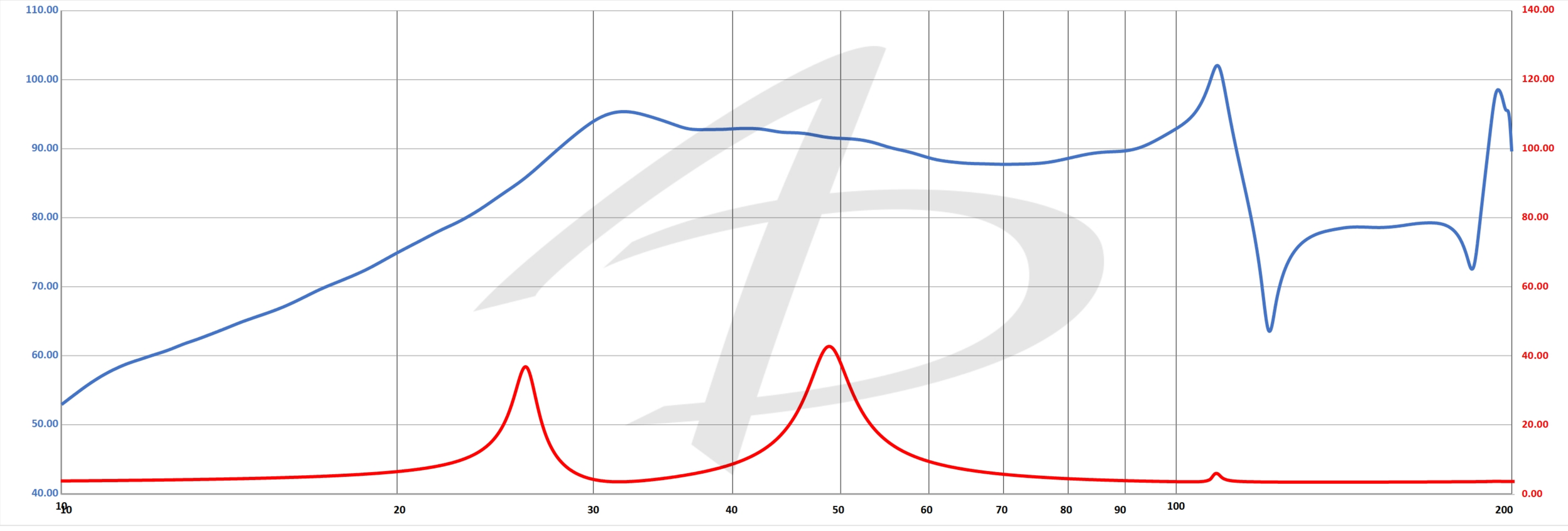

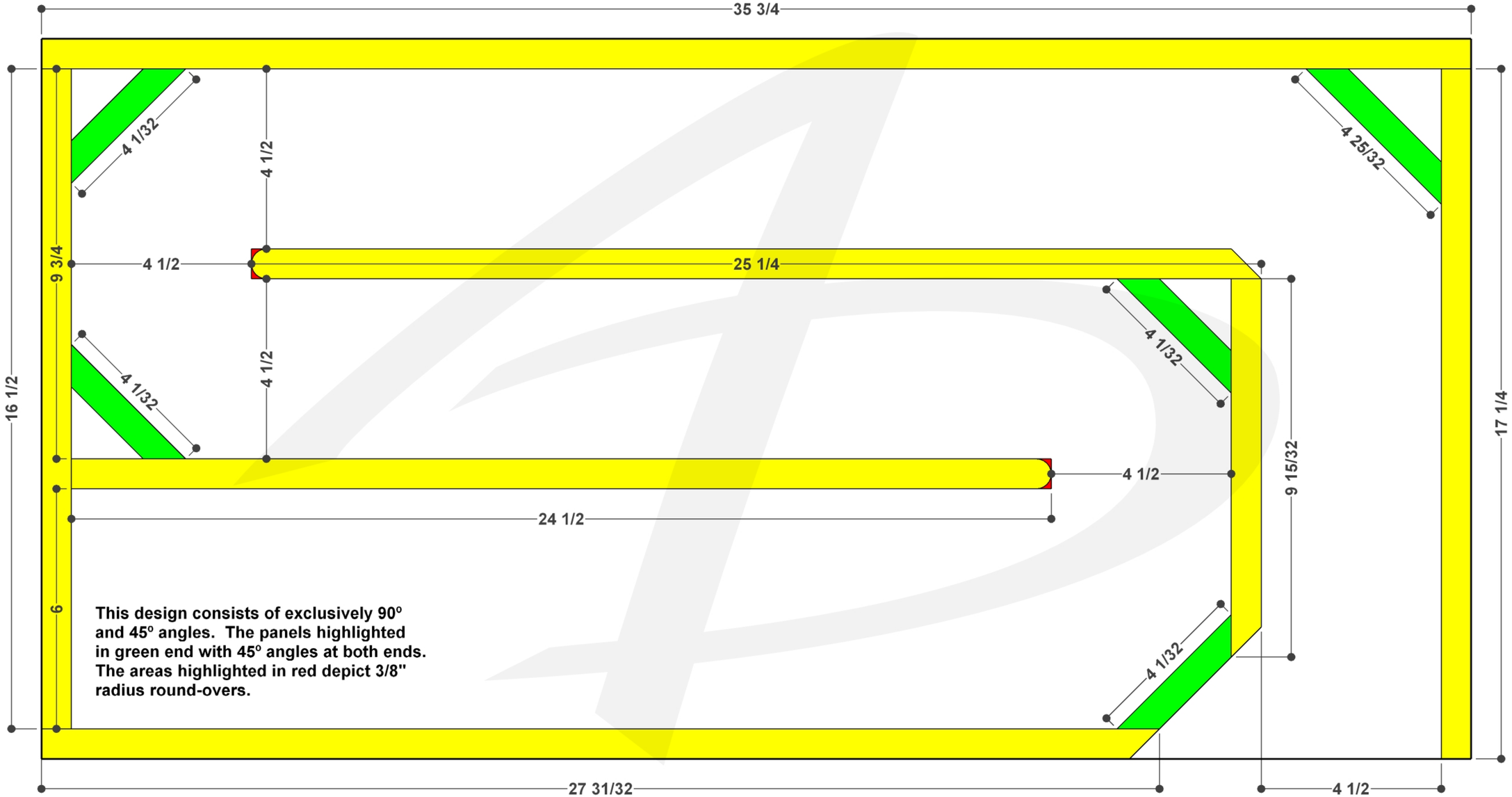
35 3/4
4 1/32
4 1/2
4 25/32
9 3/4
4 1/2
25 1/4
16 1/2
4 1/32
4 1/2
4 1/32
17 1/4
4 1/2
9 15/32
24 1/2
6
This design consists of exclusively 90º and 45º angles. The panels highlighted in green end with 45º angles at both ends. The areas highlighted in red depict 3/8" radius round-overs.
4 1/32
27 31/32
4 1/2

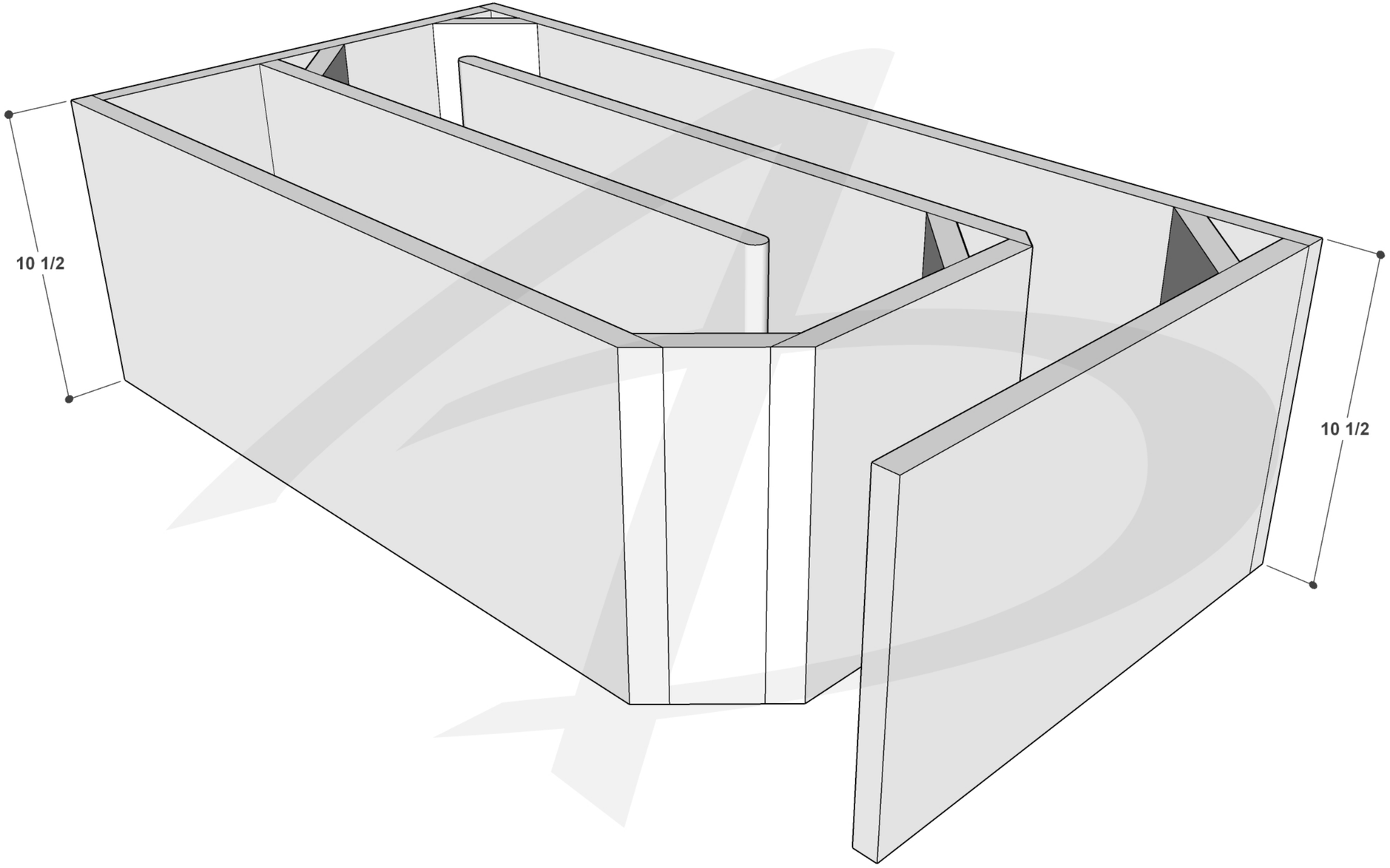
10 1/2
10 1/2

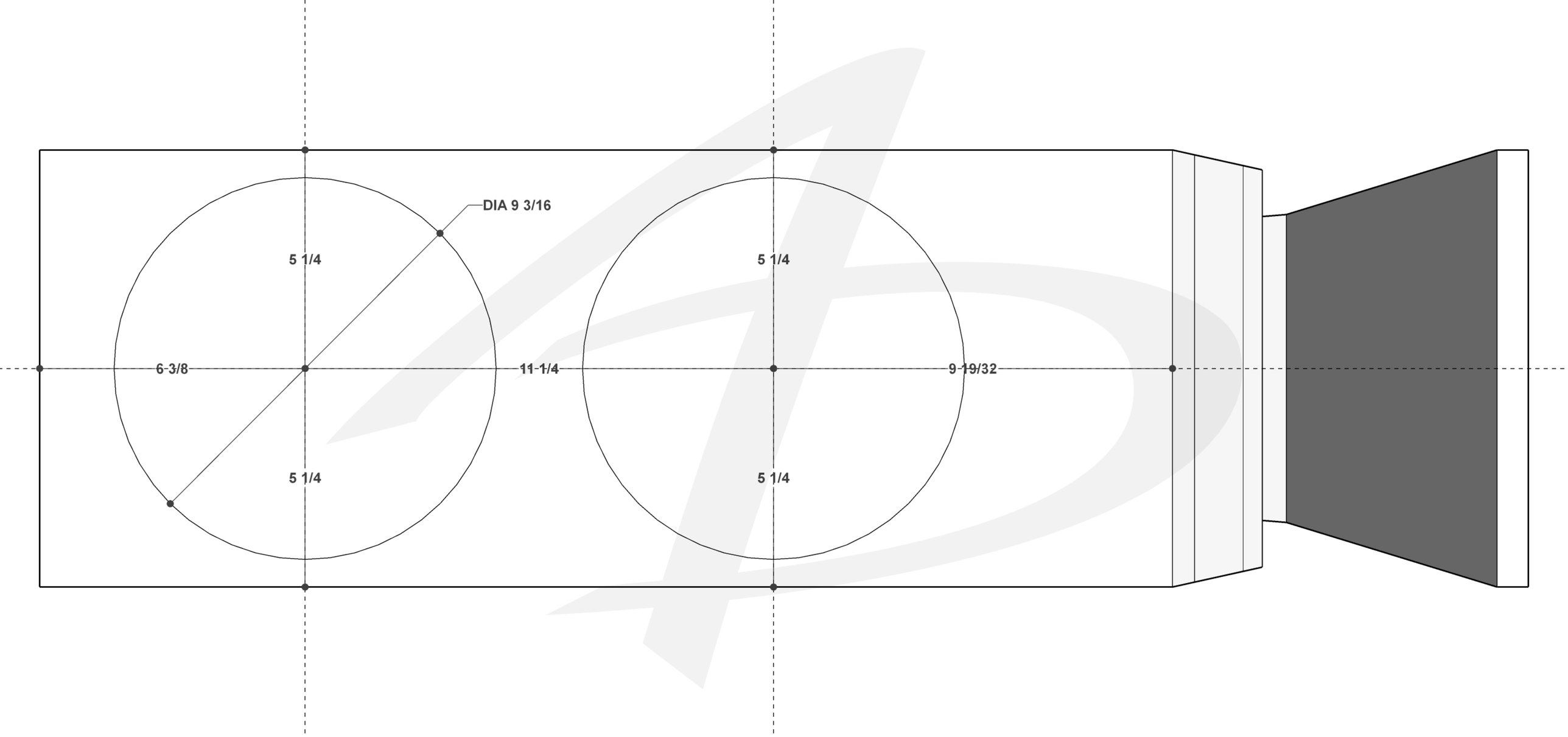
DIA 9 3/16
5 1/4
5 1/4
6 3/8
11 1/4
9 19/32
5 1/4
5 1/4

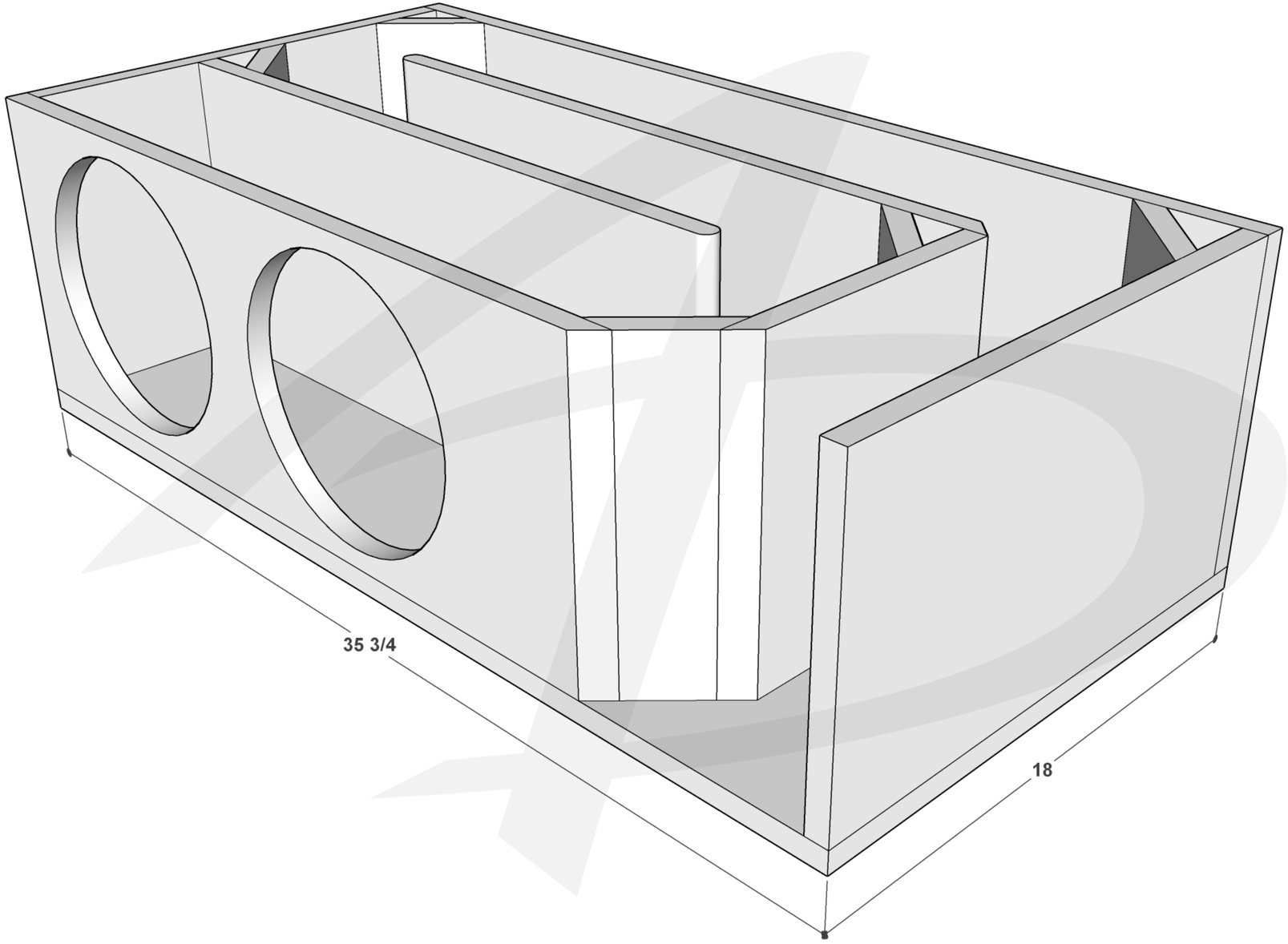
35 3/4
18

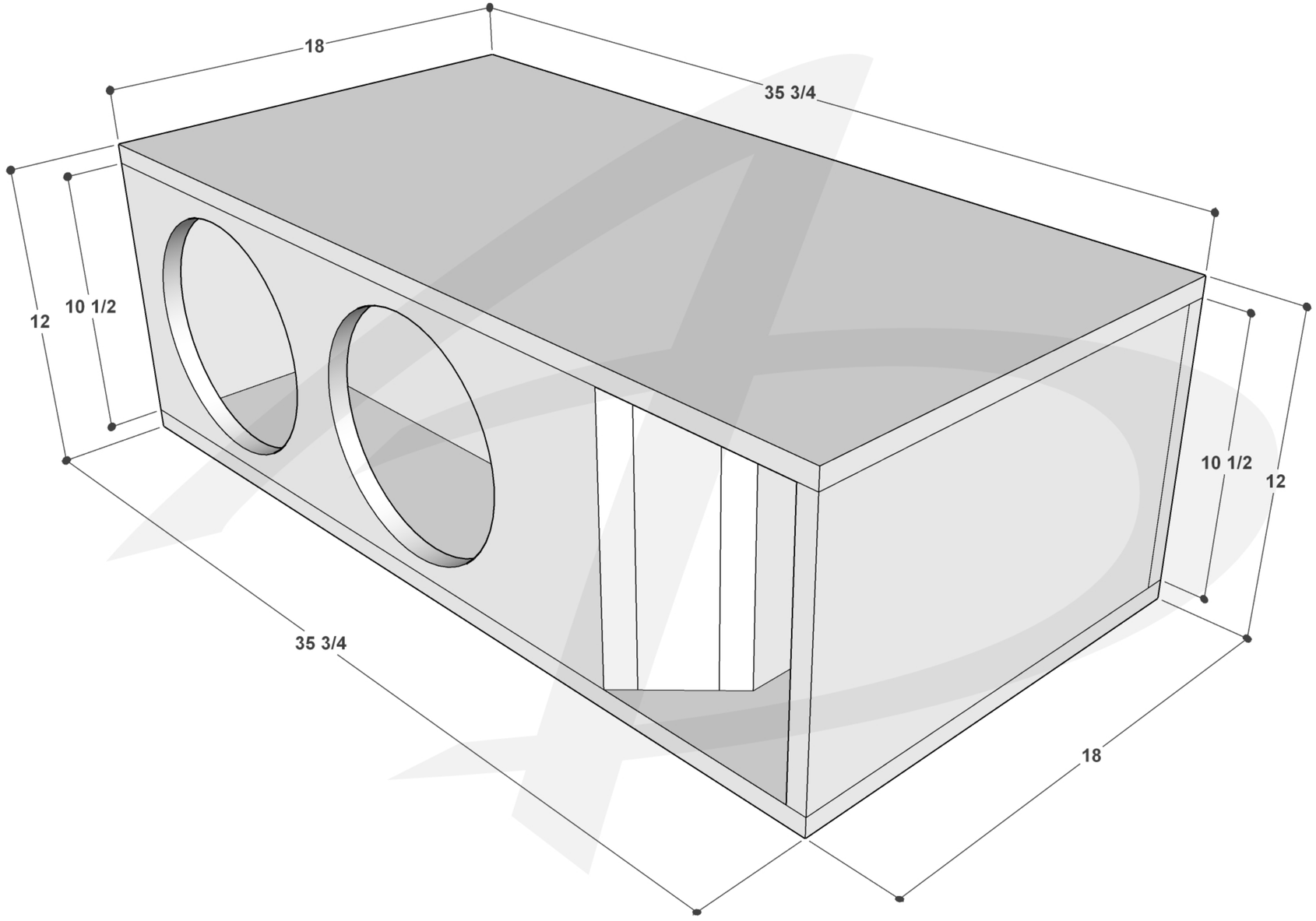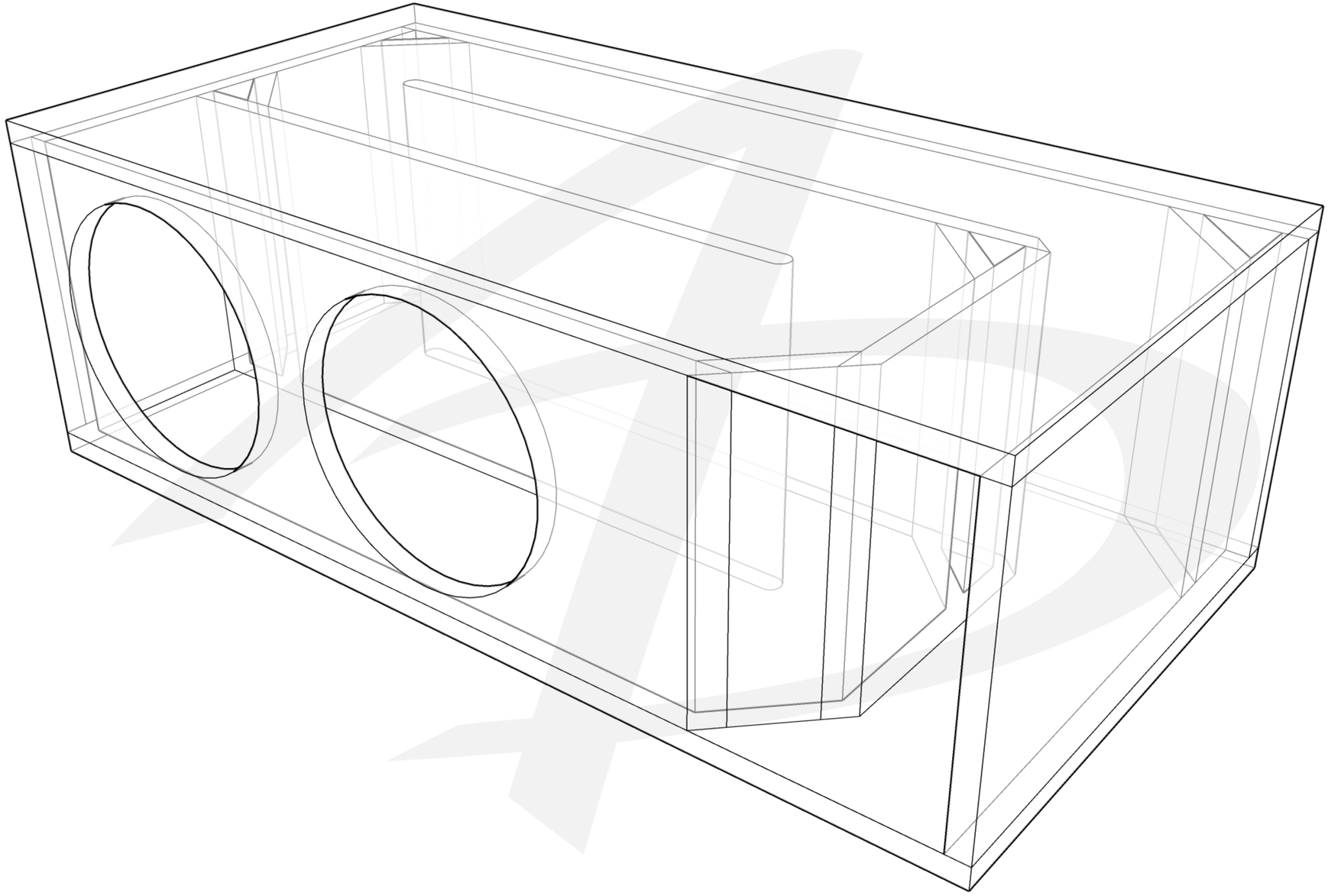
18
35 3/4
12
10 1/2
10 1/2
12
35 3/4
18