Vehicle Information	
Year	2003
Make	Jeep
Model	Grand Cherokee

Enclosure Information	
Design Type	Bass-Reflex
Placement	Cargo area
Orientation	Position the enclosure with the sub directed rearward, vent along the passenger side.

AUDIO DYNAMICS

Special Notes

Amplifier Information		
Continuous Power Handling	1,500	**W**
Subsonic Filter Setting	28	**Hz**
Low Pass Filter Setting	52	**Hz**

Subwoofer Information	
Make	Audio Dynamics
Model	AD4215D4
Quantity	1

Performance Information	
SQ	✓ Within the Vehicle
✓ **SQL**	Outside the Vehicle
SPL	Metering Position

Metering Information		
Headrest		
Dash / Windshield	**Peak Frequency**	**Hz**
Foot Well		

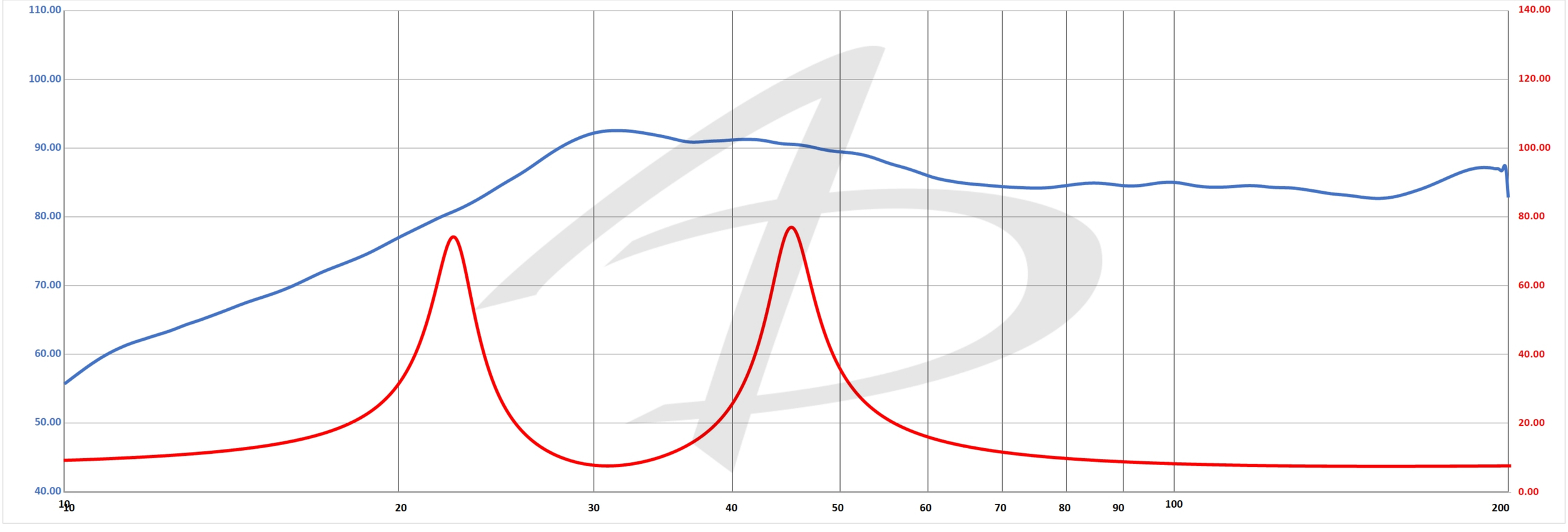

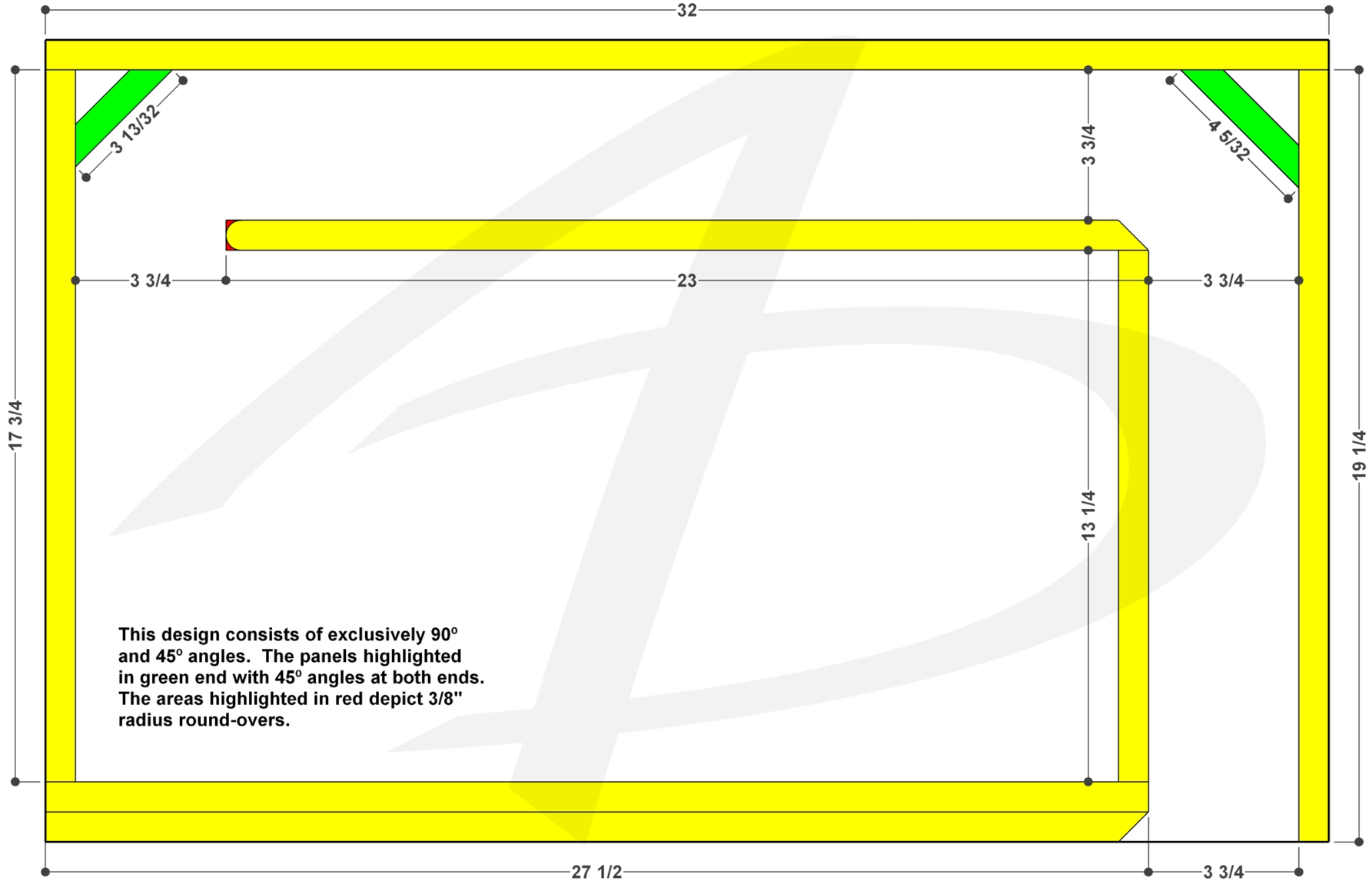
32
3 13/32
3 3/4
4 5/32
3 3/4
23
3 3/4
17 3/4
13 1/4
19 1/4
This design consists of exclusively 90° and 45° angles. The panels highlighted in green end with 45° angles at both ends. The areas highlighted in red depict 3/8" radius round-overs.
27 1/2
3 3/4

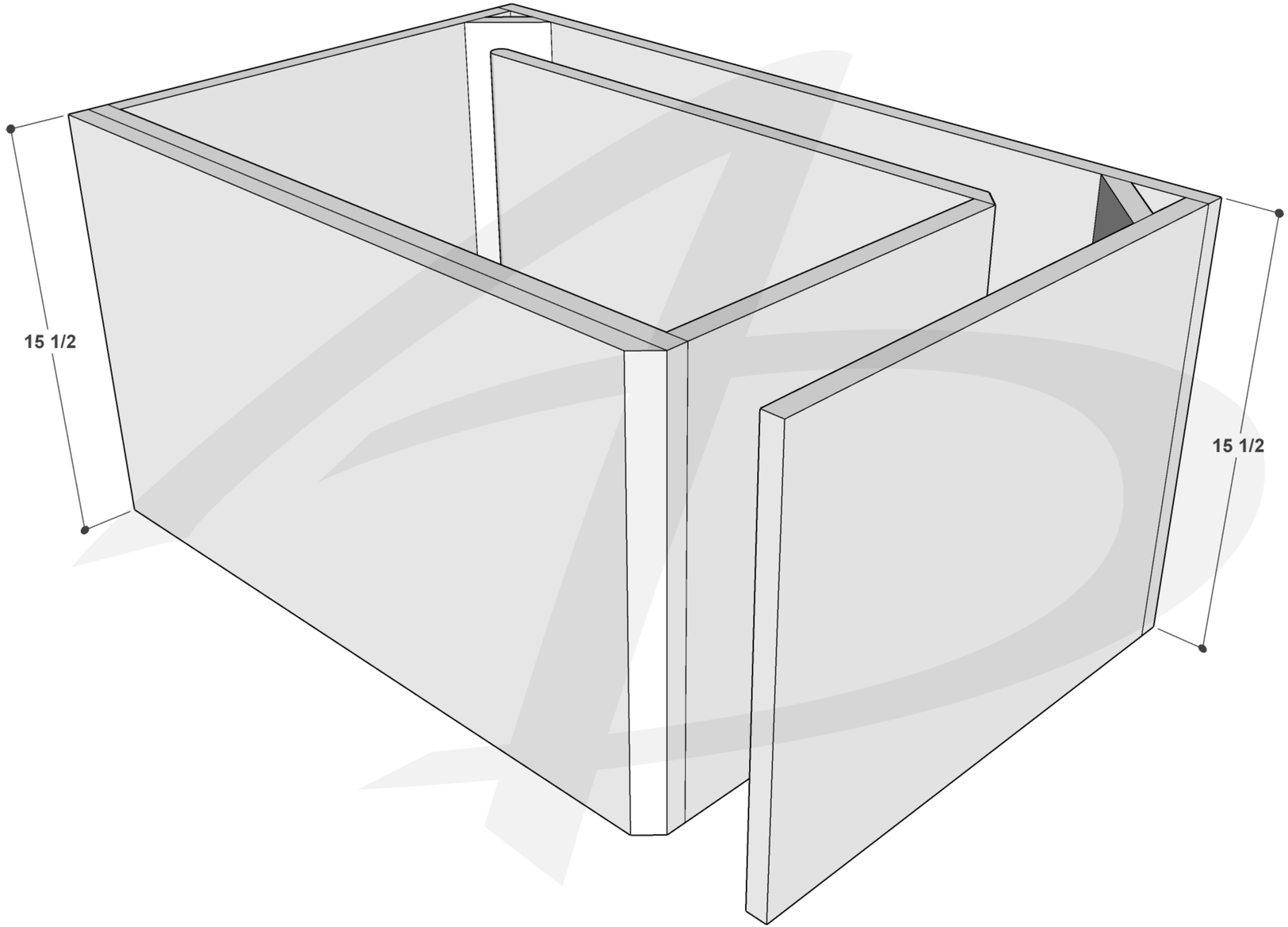
15 1/2
15 1/2

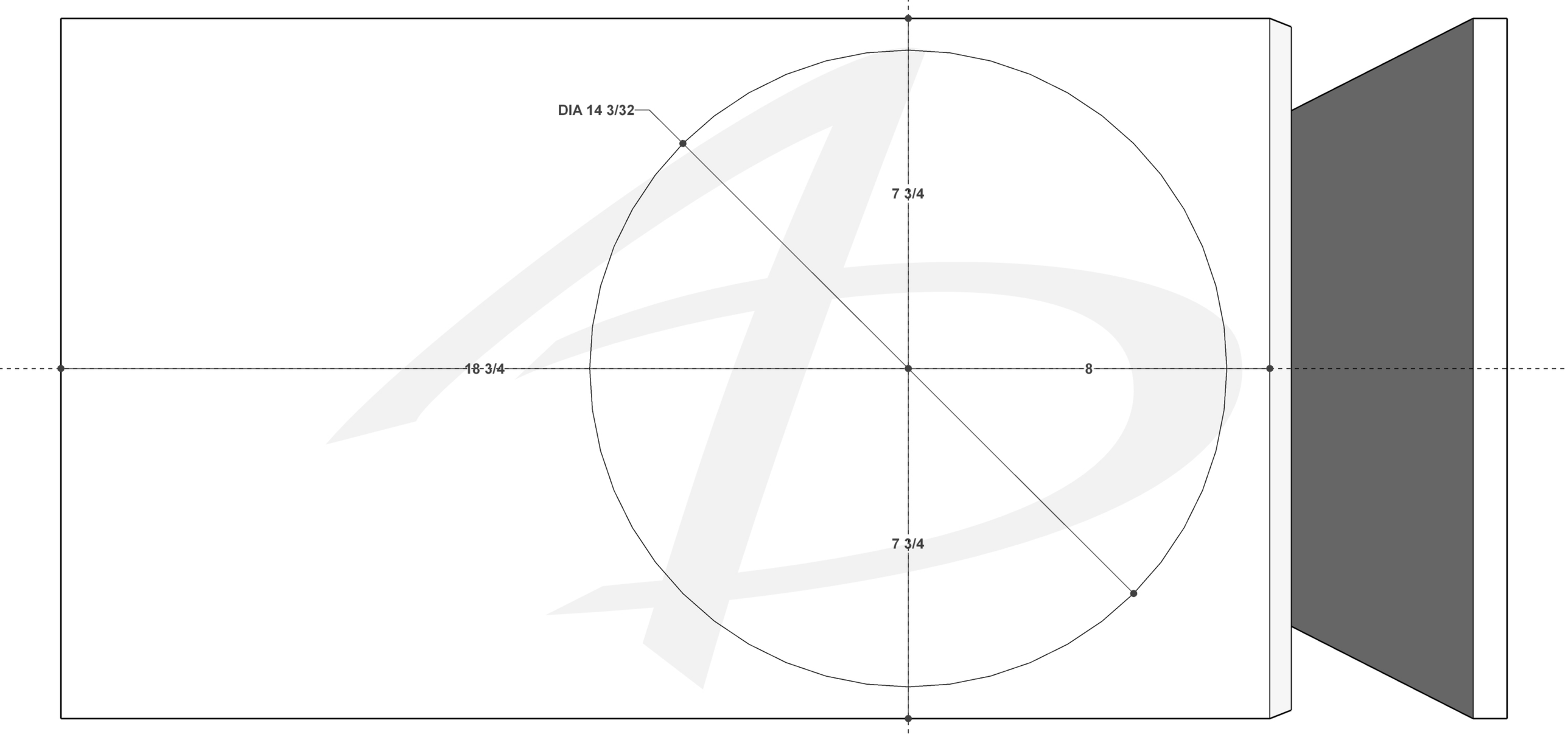
DIA 14 3/32
7 3/4
18 3/4
8
7 3/4

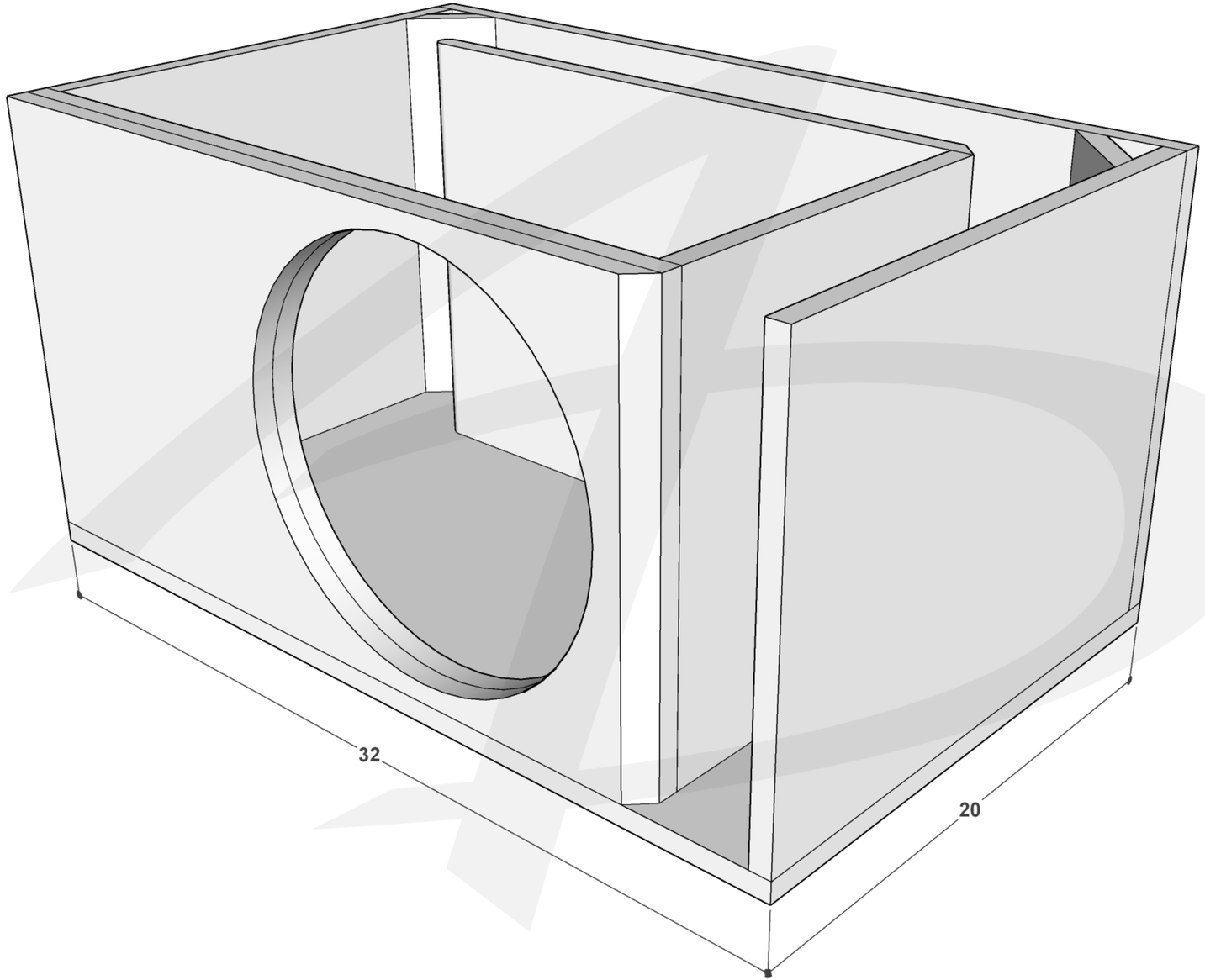
32
20

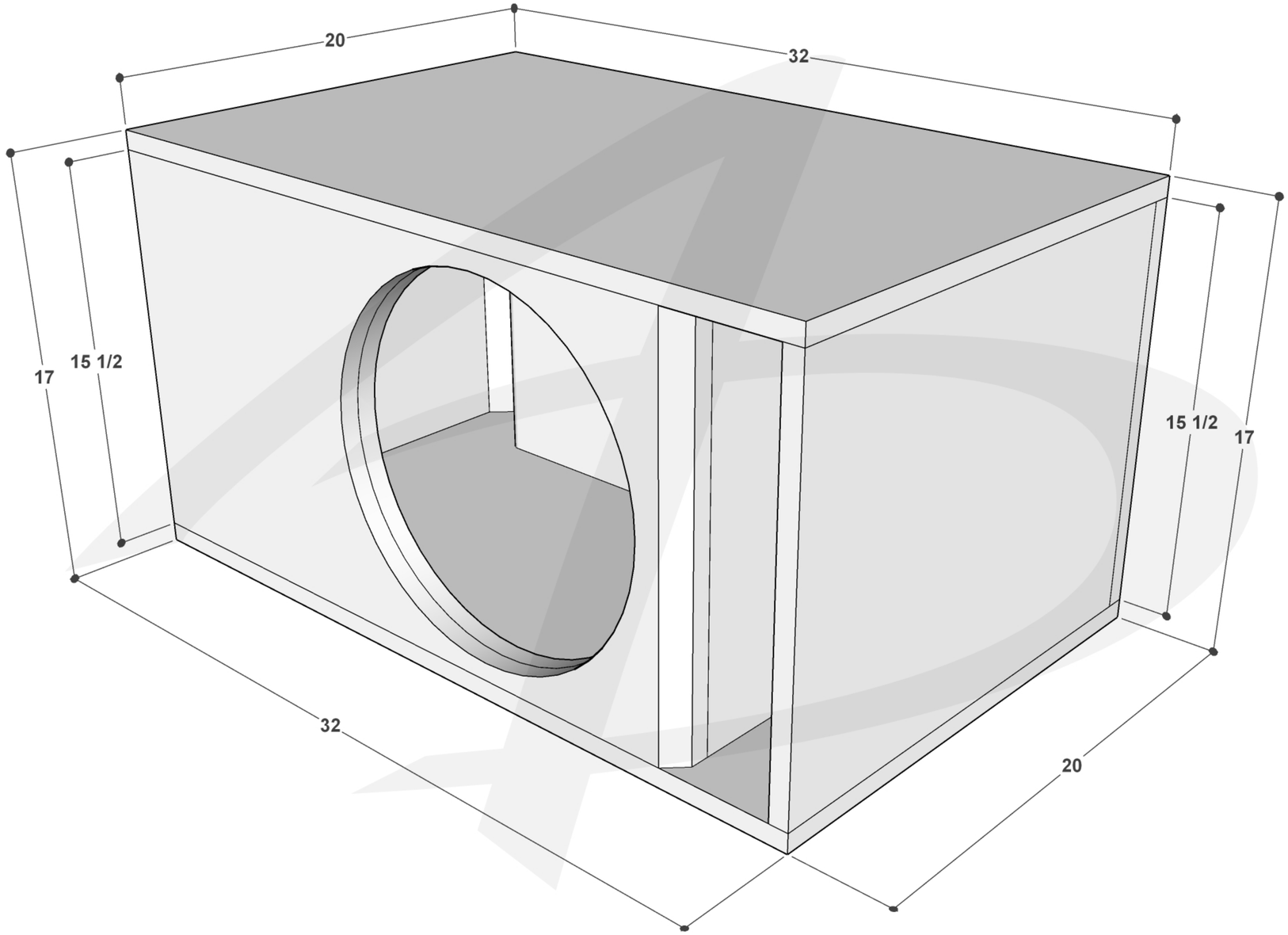
20
32
17
15 1/2
15 1/2
17
32
20

