Vehicle Information	
Year	2016
Make	Ford
Model	F150

Enclosure Information	
Design Type	6th Order Series-Tuned Bandpass
Placement	Truck Bed
Orientation	Position the enclosure with the vent directed into the main cabin.

AUDIO DYNAMICS

Special Notes
Mount the subs with the motors protruding into the two smaller chambers.

Amplifier Information		
Continuous Power Handling	9,000	**W**
Subsonic Filter Setting	24	**Hz**
Low Pass Filter Setting	55	**Hz**

Subwoofer Information	
Make	Audio Dynamics
Model	AD4215 D4
Quantity	6

Performance Information	
SQ	✓ Within the Vehicle
✓ **SQL**	Outside the Vehicle
SPL	Metering Position

Metering Information		
Headrest		
Dash / Windshield	**Peak Frequency**	**Hz**
Foot Well		

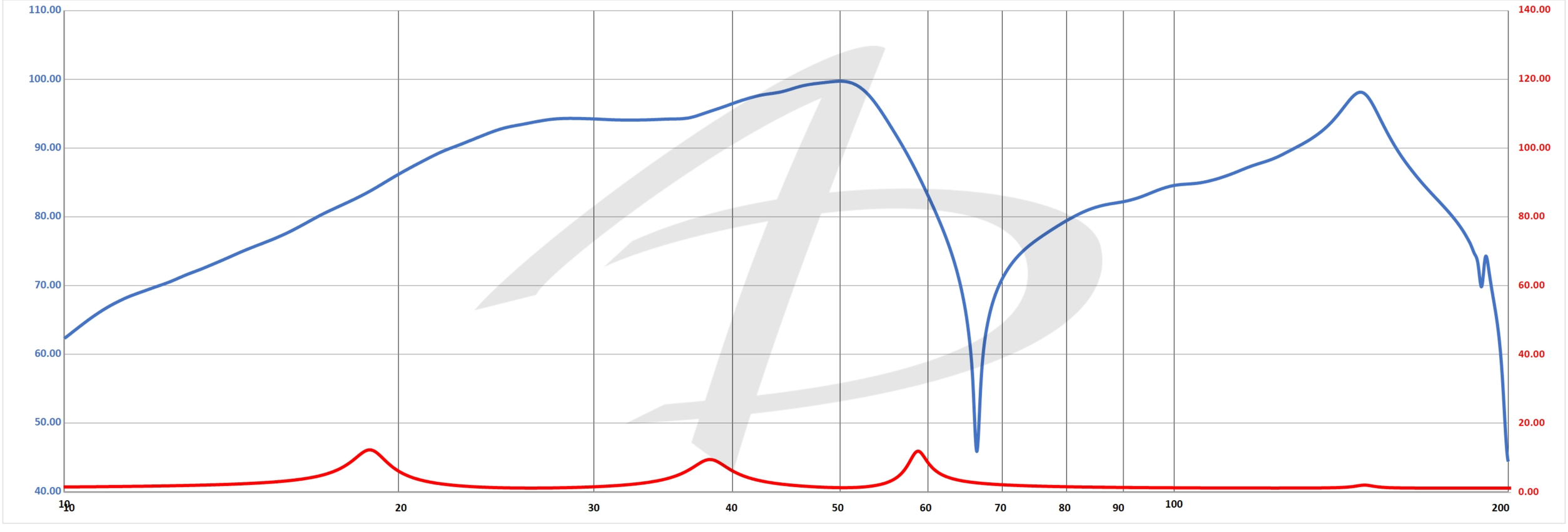

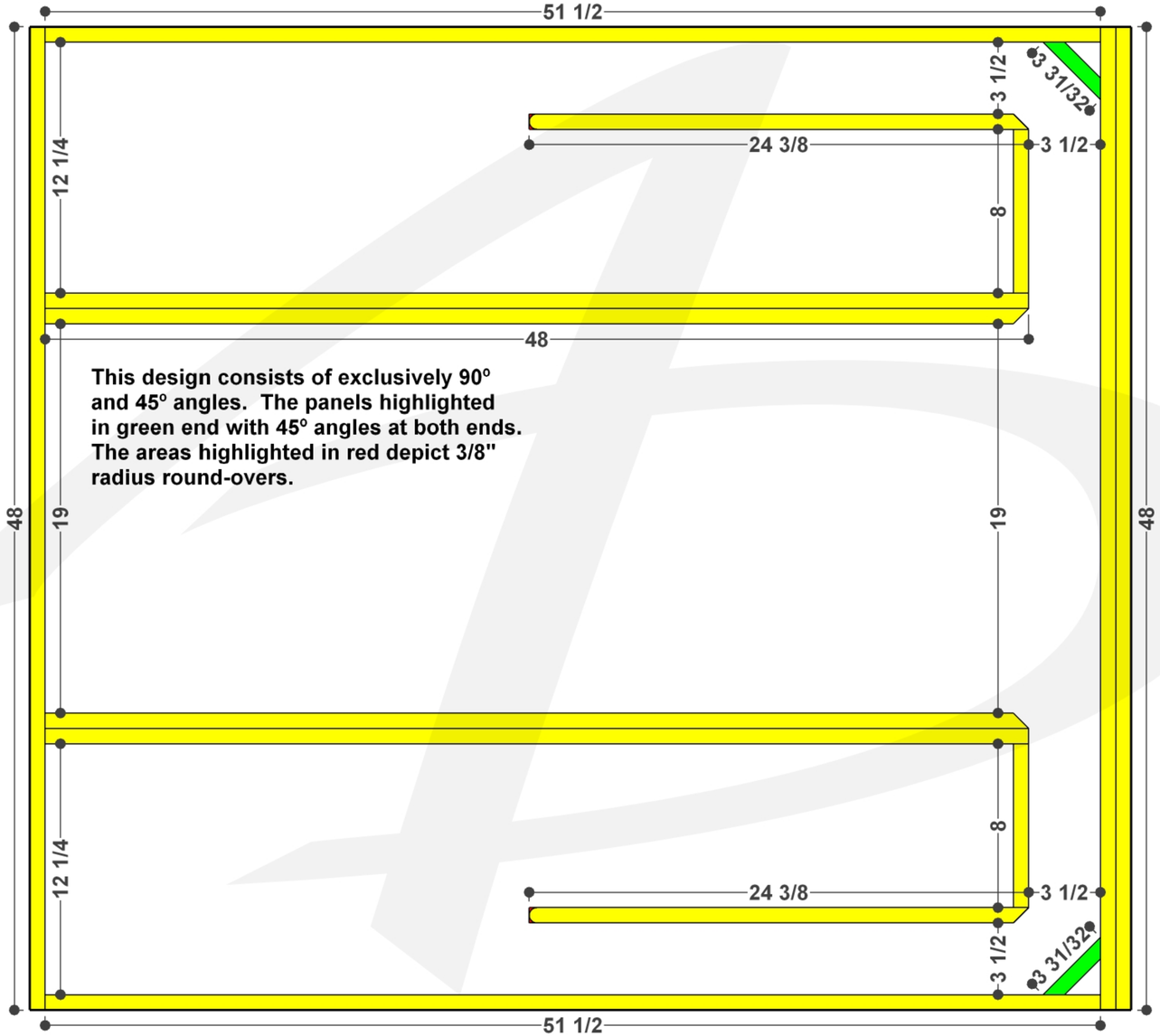
51 1/2
3 1/2
3 31/32
24 3/8
3 1/2
12 1/4
8
48
This design consists of exclusively 90° and 45° angles. The panels highlighted in green end with 45° angles at both ends. The areas highlighted in red depict 3/8" radius round-overs.
48
19
19
48
8
12 1/4
24 3/8
3 1/2
3 1/2
3 31/32
51 1/2

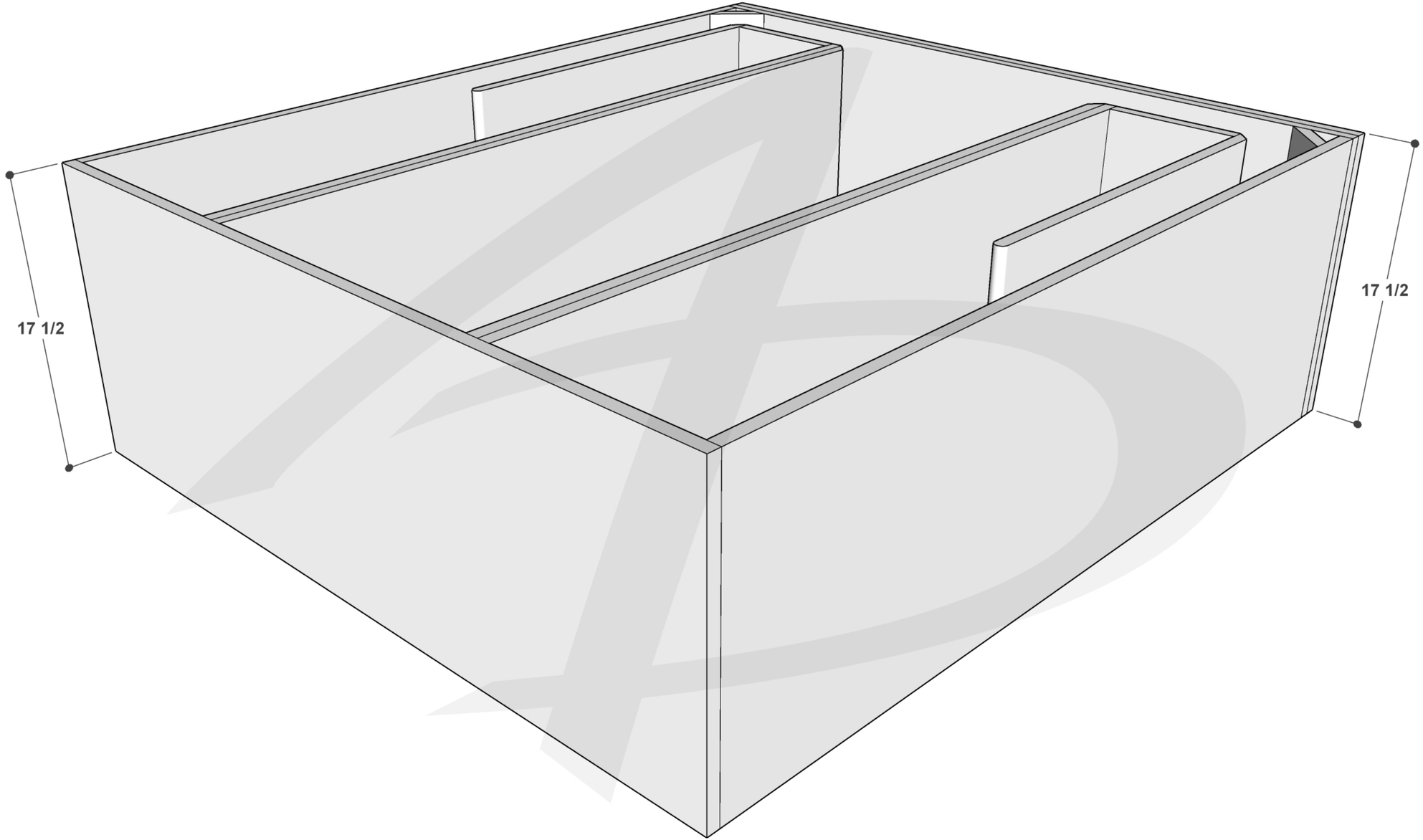
17 1/2
17 1/2

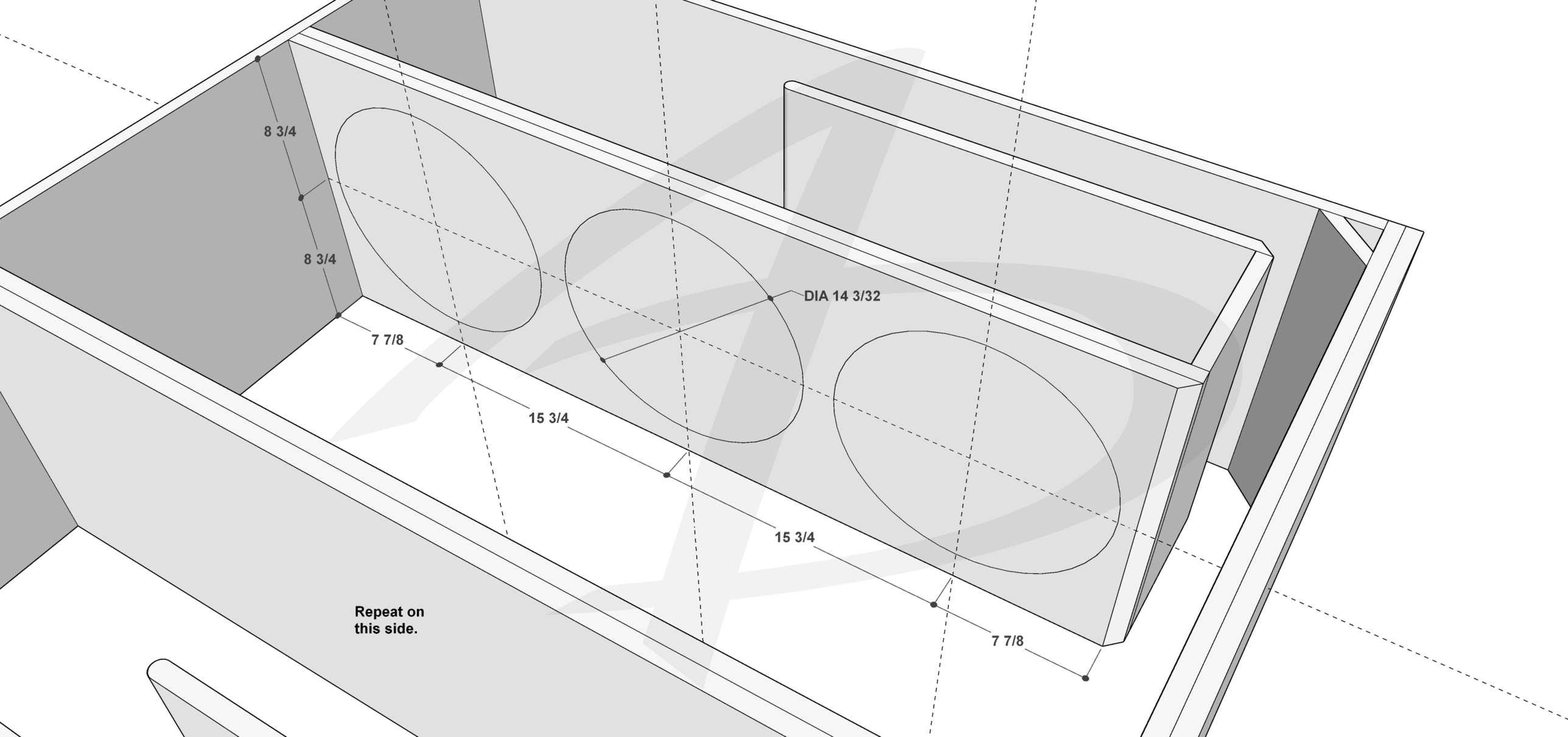
8 3/4
8 3/4
DIA 14 3/32
7 7/8
15 3/4
15 3/4
7 7/8
Repeat on
this side.

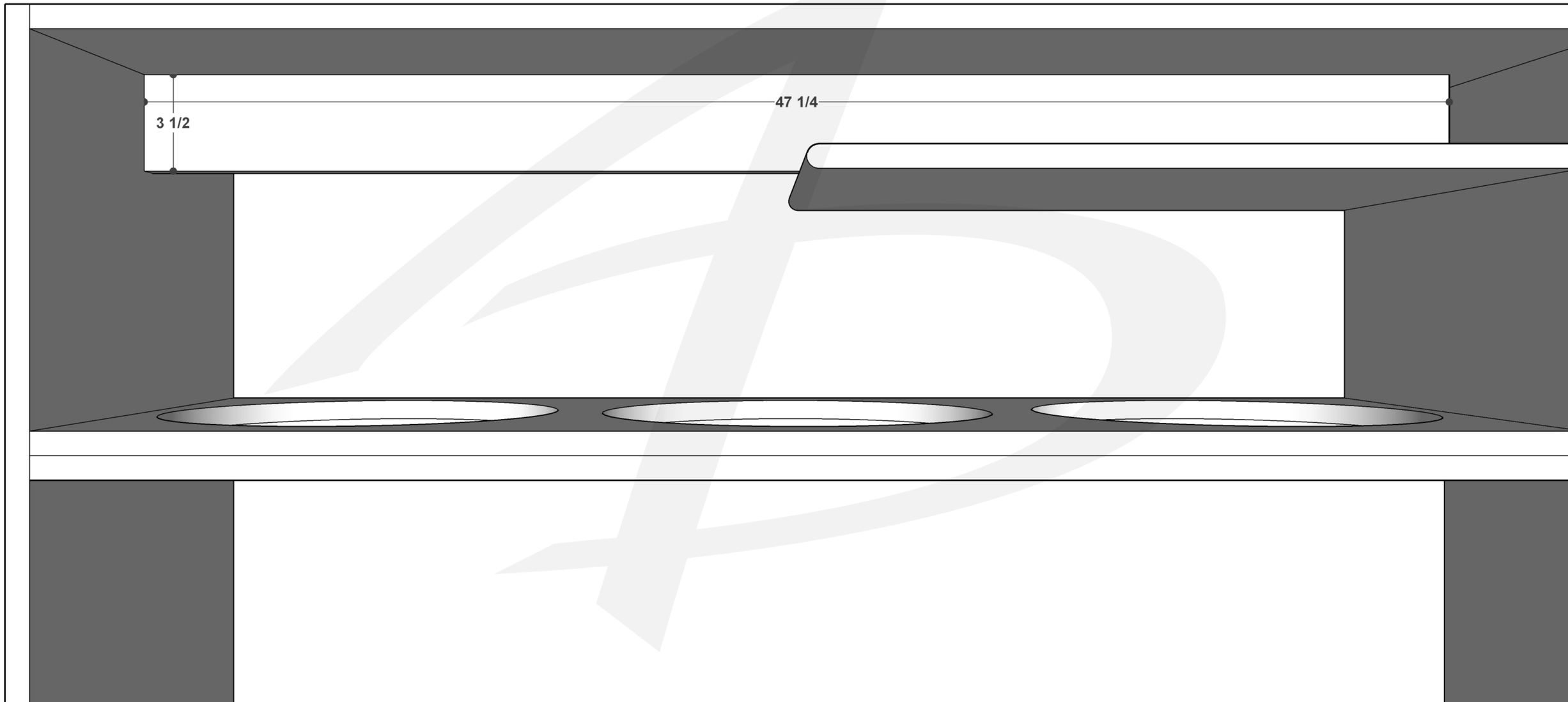
47 1/4
3 1/2

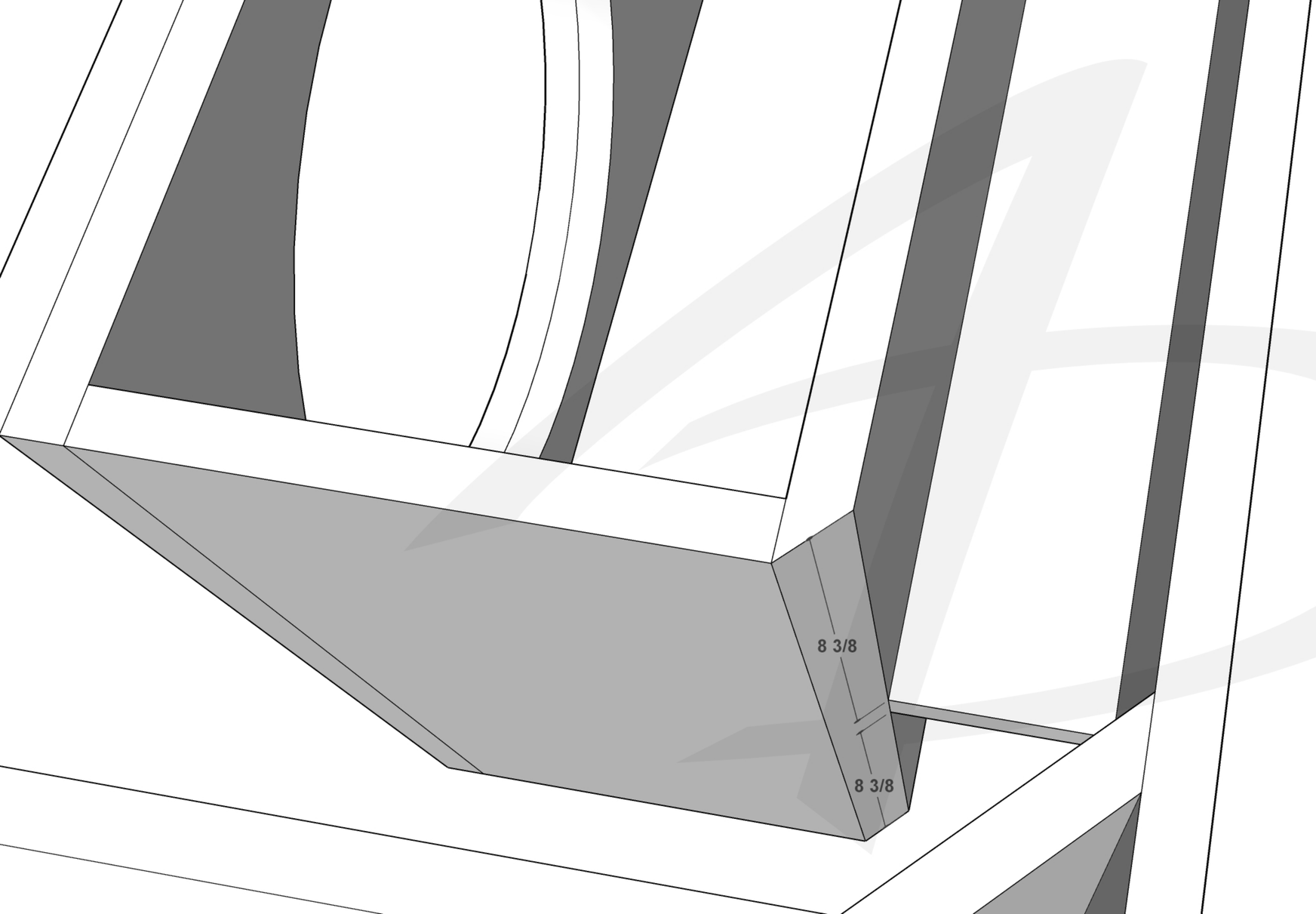
8 3/8
8 3/8

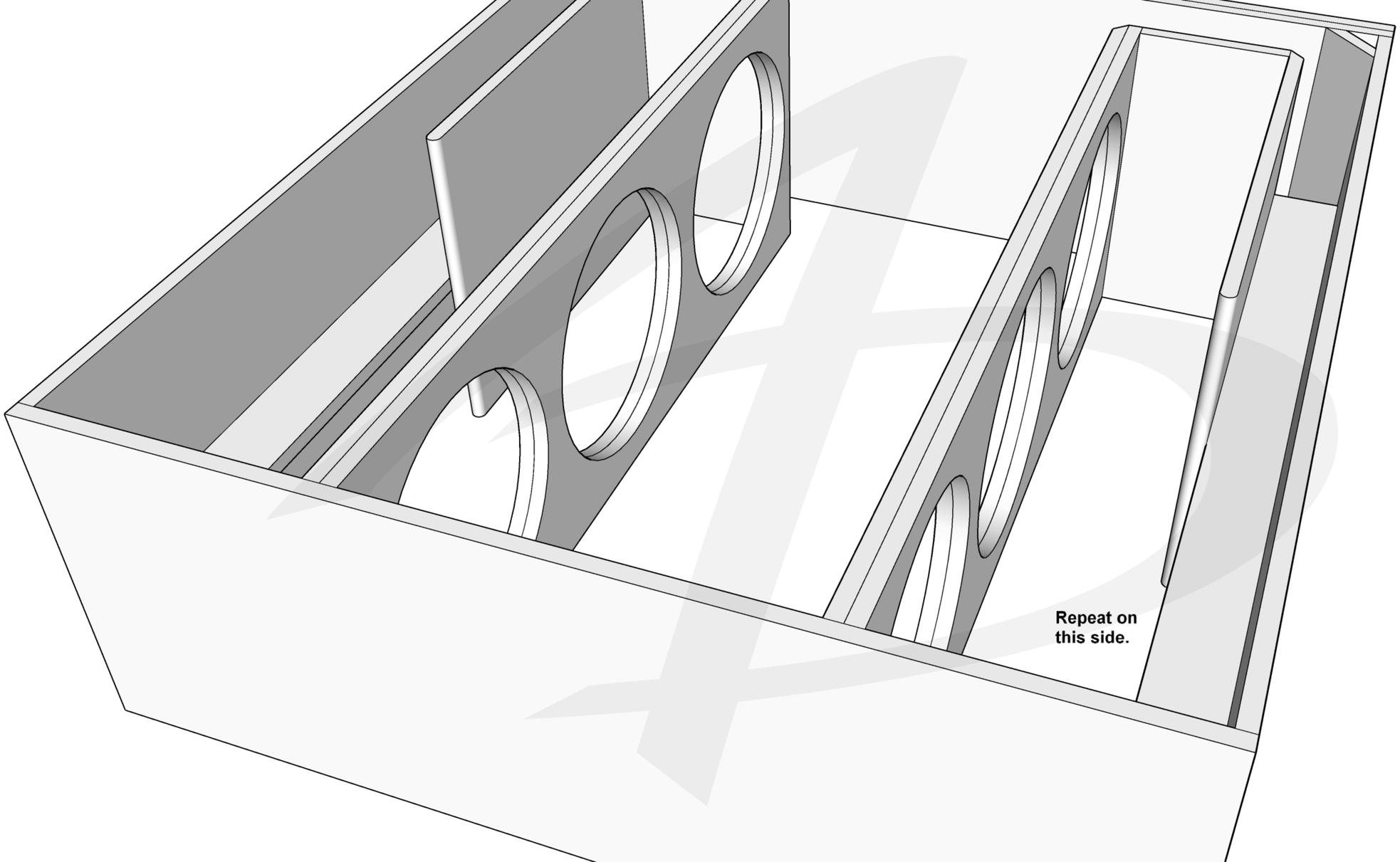
Repeat on
this side.

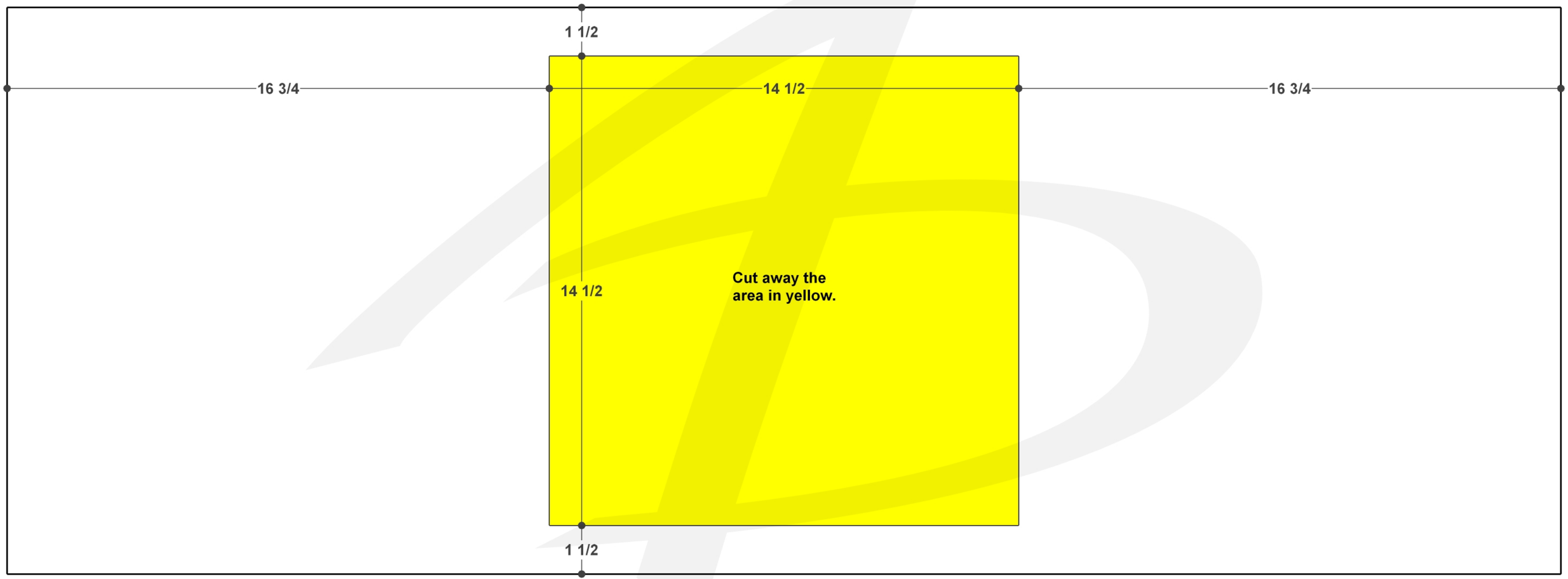
1 1/2
16 3/4
14 1/2
16 3/4
14 1/2
Cut away the
area in yellow.
1 1/2

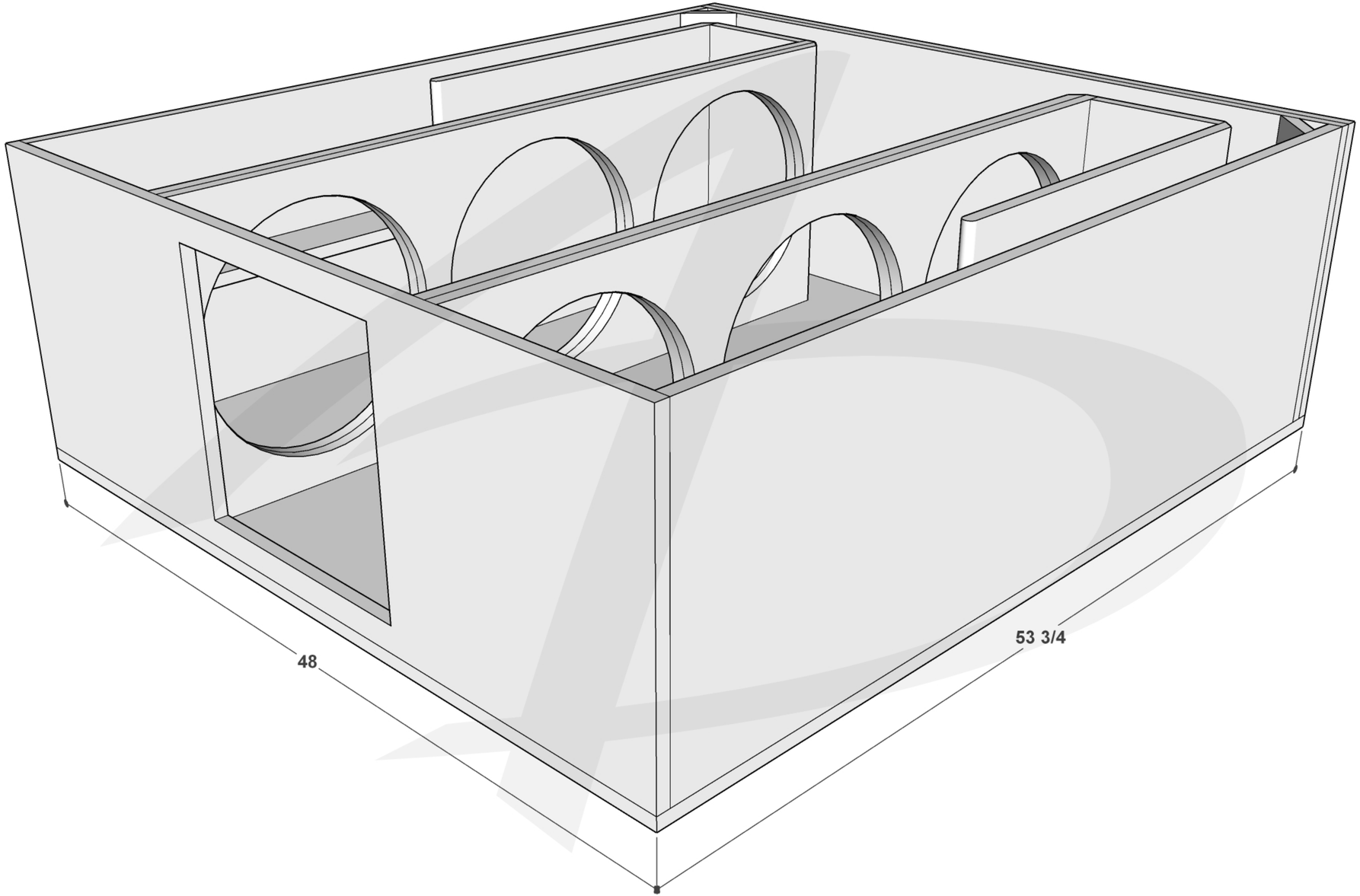
48
53 3/4

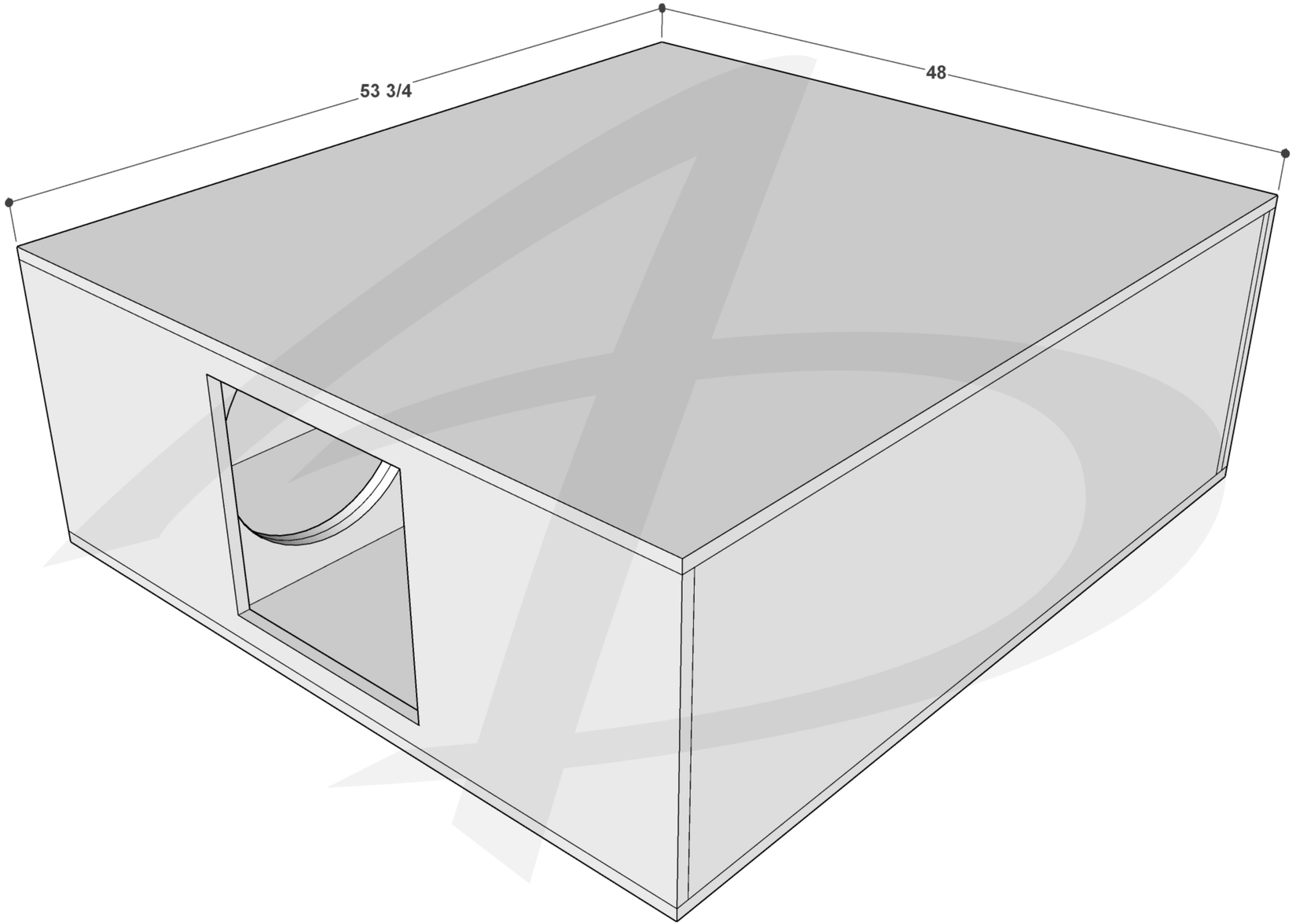
53 3/4
48

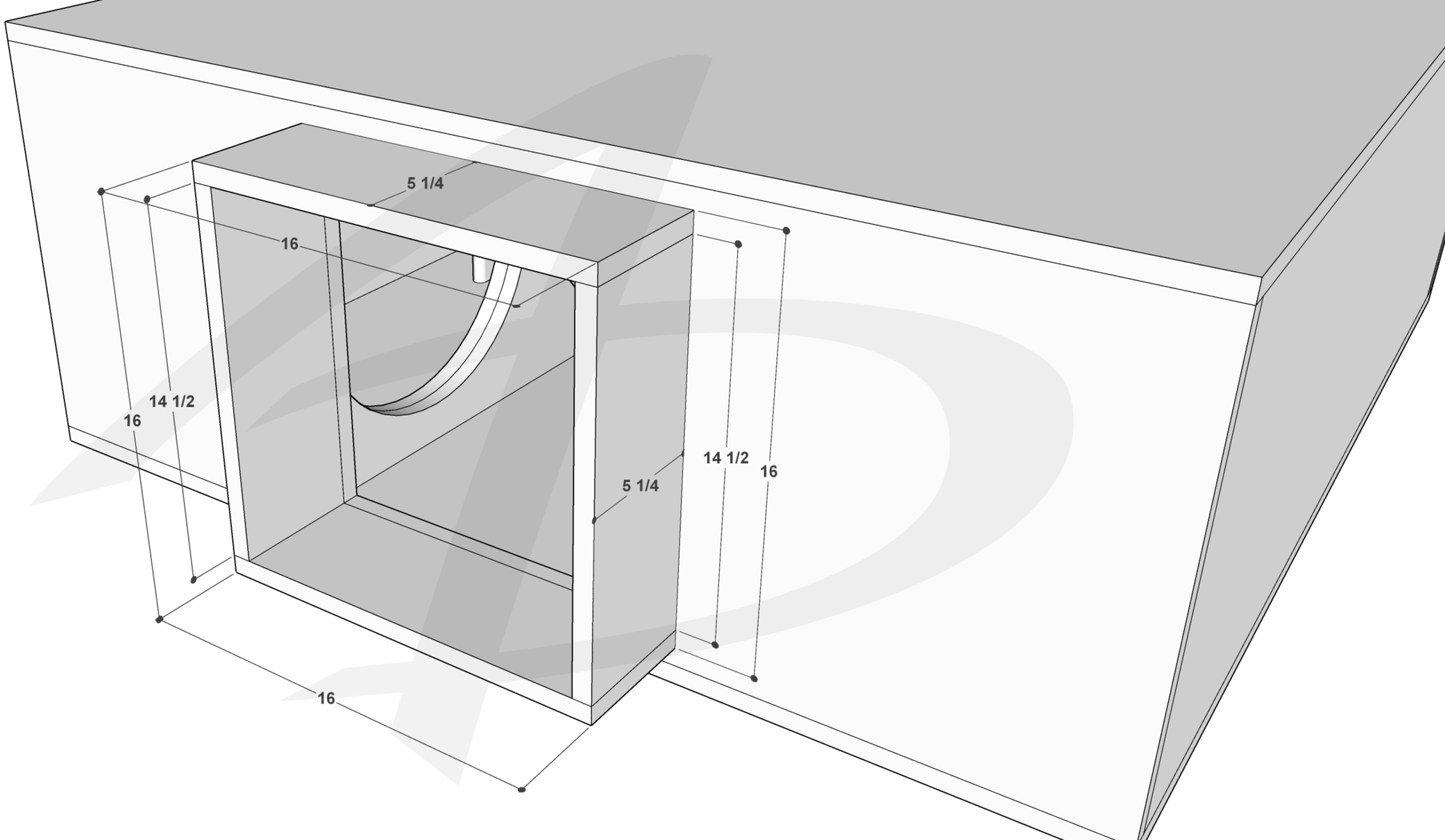
5 1/4
16
14 1/2
16
5 1/4
14 1/2
16
16

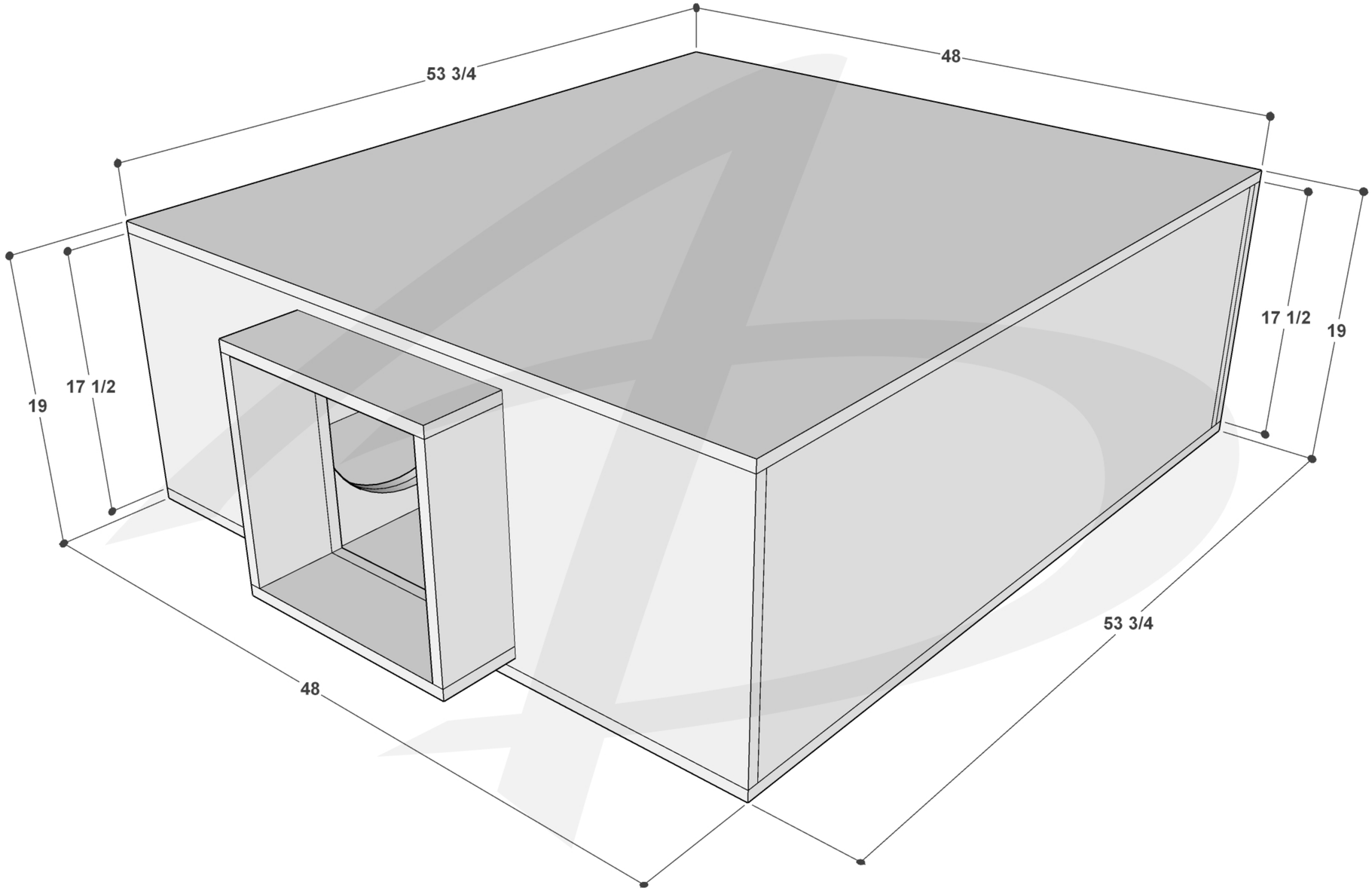
53 3/4
48
17 1/2
19
19
17 1/2
48
53 3/4

